ResearchGate

See discussions, stats, and author profiles for this publication at: https://www.researchgate.net/publication/338491335

Design and Performance Evaluation of a Multi-Tuber Peeling Machine

Article *in* AgriEngineering · January 2020

DOI: 10.3390/agriengineering2010004

CITATIONS
17

READS
1,683

2 authors:

Adeshina Fadeyibi
Kwara State University
67 PUBLICATIONS **300** CITATIONS

SEE PROFILE

Faith Ajao
Landmark University
7 PUBLICATIONS **45** CITATIONS

SEE PROFILE

Some of the authors of this publication are also working on these related projects:

Project Effect of moisture content on aerodynamic properties of water melon seeds View project

Project CONCEPTUAL DESIGN AND SIMULATION OF AFRICAN OIL BEAN SEED DEHULLER View project

All content following this page was uploaded by Adeshina Fadeyibi on 09 January 2020.

The user has requested enhancement of the downloaded file.

AgriEngineering

MDPI

Technical Note

Design and Performance Evaluation of a Multi-Tuber Peeling Machine

Adeshina Fadeyibi [1,*] and Olusola faith Ajao [2]

[1] Department of Food and Agricultural Engineering, Kwara State University, Malete, Ilorin P.M.B. 1530, Kwara State, Nigeria;

[2] Department of Agricultural and Biosystems Engineering, Landmark University, Omuaran, Omuaran P.M.B. 1001, Kwara State, Nigeria; ajao.faith@lmu.edu.ng

* Correspondence: adeshina.fadeyibi@kwasu.edu.ng; Tel.: +234-(0)-703-4867-681

Received: 22 November 2019; Accepted: 8 January 2020; Published: 9 January 2020

Abstract: Tuber peeling is an essential unit operation prior to further processing**.** In this research, a batch loading tuber-peeling machine, with a capacity of 10 kg/min, was designed, fabricated and tested for cocoyam, sweet potato, yam and cassava tubers. The machine was designed to operate at a speed range of 350–750 rpm and time range of 5–12 min based on the principle of surface scratching. The performance of the machine was determined with respect to the peeling efficiency, percent weight of peel and flesh loss. The results showed that the peeling efficiency increased with an increase in the shaft speed for all the tubers. Also, the flesh loss and percent weight of peel decreased with an increase in the shaft speed for cassava and cocoyam tubers but increased for sweet potato and yam tubers ($p < 0.05$). Effective peeling of the tubers was achieved for sweet potato and yam at all the shaft speeds and time ranges considered.

Keywords: design; fabrication; evaluation; cassava; cocoyam; yam; peeling machine

1. Introduction

Root and tuber crops, including cassava (*Manihot esculenta*, Crantz), yam (*Dioscorea* spp.), sweet potato (*Ipomoea batatas*, Linneus) and cocoyam (*Colocasia* spp. and *Xanthosoma sagittifolium*), are widely grown and consumed as staple foods in many parts of Africa. According to the report of the International Institute of Tropical Agriculture [1], the production of the cassava, sweet potato, yam and cocoyam account for about 95% of the total root and tuber crops production in Africa. They are part of the most important energy sources in the human diet as they are highly enriched in carbohydrate. They can be consumed as vegetables or used as raw material for the small-scale industries at a global level, particularly in less-developed tropical countries. In some other places, they serve as cash crops that thrive where most other crops fail. These crops are also capable of providing efficient calorific energy almost double that of wheat and rice [2]. They also provide some minerals and essential vitamins, although a proportion of these elements may be lost during processing as, for example, in the case of cassava [3].

The quantity and quality of the protein in root and tuber crops are variable and relatively low. The advantages of root and tuber crops as staple foods includes the following: they are well adapted to diverse soil and environmental conditions and a wide variety of farming systems; they are highly efficient edible source of carbohydrates when compared to other food crops. The important limitations are their bulkiness with some the tubers weighing over 5 kg and perishability with a moisture content as high as 90%. These are associated with high transport costs, a short shelf life and limited market margins, which impose serious constraints in the urban markets of most developing countries [1]. Production patterns reflect the agro-climate of the area, traditional farming practices

and often the local cultural heritage. With few exceptions, roots and tubers are produced by small-scale farmers using traditional tools and without any inputs of fertilizers or chemicals for weed and pest control. Traditionally women have provided most of the labour for production, harvesting and processing. The perishability and post-harvest losses of root and tuber crops are the major constraints in their utilization [2].

1.1. Related Work on Tuber-Peeling Operation

Tuber crops are utilized extensively for human and livestock consumption as well as for industrial purposes. In order to expand the utilization of the tubers, there is need for an extensive exploration of their value addition by improving the shelf life of the products and enhancing foreign exchange. However, the processing of the tubers, especially the peeling operation, is usually labour intensive and requires a high level of mechanization in order to meet the high demand for the products. The peeling operation has become a major bottleneck in tuber processing, especially for cassava and yam, because of the difference in their physical properties. Many research efforts have, nevertheless, been reported for mechanical peeling operations of the root and tuber crops. For example, Table 1 shows some of the related works and their limitations.

Table 1. Related works, contributions and limitations.

s/n	Source	Contribution	Limitation
1	Odigboh [4]	Designed a three-model cassava-peeling machine.	Poor equipment calibration and high tuber flesh loss.
2	Singh and Shukla [5]	Designed a power operated batch type mechanical peeler for potatoes	Poor equipment calibration and high tuber flesh loss.
3	Suter [6]	Designed a roller-type potato peeler which uses set of abrasive rollers. The motion of roller is controlled by means of a sensor.	Poor equipment calibration. Peeling efficiency was significantly low with a high peeling loss.
4	Akintunde et al. [7]	Designed a cassava-peeling machine	Tuber are soaked in water before peeling. Poor equipment calibration and high tuber flesh loss.
5	Adetan et al. [8]	Designed a spring-loaded cassava-peeling machine with five spring-loading points equally spaced at 140 mm	Poor equipment calibration. Peeling efficiency was significantly low with a high peeling loss.
6	Agbetoye et al. [9]	Developed a cassava-peeling machine with a very low throughput capacity.	Poor equipment calibration and high tuber flesh loss

The common problems associated with the popular designs, however, are the difficulty of equipment calibration, higher tuber flesh loss and lower machine efficiency. Also, most of the designs of the peeling machines are crop specific [10–12]. However, the design of a general-purpose peeling machine has not been reported hitherto. This new machine is aimed at addressing the problem of equipment calibration and tuber flesh loss. There is, therefore, a need to design a machine which can peel different kind of tuber crops irrespective of their sizes and shapes. The objectives of this research are to determine some physical and mechanical properties of cassava, sweet potatoes, yam and cocoyam essential in the design of a peeling machine for the tubers; to design and fabricate a multi-tuber peeling machine that would operate on a batch-loading system with a capacity of 100 kg per min; and to determine the performance with respect to the efficiency of the machine.

2. Materials and Methods

2.1. Materials

The materials for construction of the machine were selected based on availability, properties, machinability, affordability and economic considerations. Also, the strength of the materials for construction, toughness and stiffness were also taken into consideration. The materials used in the fabrication of the machine are listed in Table 2.

Table 2. Materials for fabrication of the tuber peeling machine.

s/n	Materials	Dimension
1	Iron pillow bearing	25 mm
2	Iron shaft	30 mm
3	Two pulleys	500 mm and 70 mm
4	Bolts ad nuts	13 and 19 mm
5	Angle iron bar	3 inches
6	Mild steel plate	4 mm thick
7	Iron flat bar	30 mm and 5mm
8	Iron rod	20 mm
9	Hinges and lock	Standard size
10	Other consumables (electrodes, grinding disc, cutting disc)	Standard sizes

2.2. Determination of Properties of the Tuber Relevant to Machine Design

Physical properties of the tubers, including size and shape are essential in determining the volume of the peeling drum [12]. The mechanical properties such as compression, shear stress and hardness are essential in the design of various machine components and for selecting the type of material for construction of the peeling sprockets. Most agricultural products are viscoelastic, they behave differently under static, tensile, or compressive forces, and under dynamic loading orientation. With the knowledge of the mechanical behavior of the tubers, it is possible to decide whether, for example, shearing or impact is best for the peeling operation [13]. Therefore, in this investigation, the mass of the tubers was determined, in 10 replicates each, using the Camry electronic weighing scale; which has high sensitivity with a precision of 0.01 g. The size and shape were determined through the measurement of the tuber diameter, length, thickness or minor diameter in 10 replicates using a measuring tape and veneir caliper. The surface area of each of the tuber was determined from the data obtained from the tuber dimensions. The volume of each tuber with 10 replicates each was determined using the water-displacement method. The density was estimated for each tuber, from the information on masses and volume using the method reported by Fadeyibi and Osunde [13]. The compressive strength, shear stress and hardness of the tuber were also determined using a UTM (universal tensile testing machine).

2.3. Machine General Description and Operating Principle

The general purpose peeling machine was made up of a revolving cylindrical peeling drum lined with galvanized wire gauze, supported at both ends with two 25 mm pillow bearings mounted on a trapezoidal type of frame to support the machine by giving maximum stability as shown in Figure 1. A shaft supports the pulley and a v-belt was made to pass through the pillow bearing. A low-speed electric motor with a pulley rotation of 1:6 was used to provide the driving power and transfer the power to the peeling unit via the belt and pulley system. The peeling unit consists of a drum made of sharp edge wire gauze which rotates to give a smooth scratching and scraping of the tuber skin. The drum which rotates horizontally was tapered at both ends to a semi cone-like shape with galvanized steel plate. A V-belt with adequate tension was used to provide durability and required tension. The belt is meant to transmit power from the driving motor to the peeling drum via two pulleys. The pulley was attached to the shaft passing through the peeling drum and supported at both ends with pillow bearings. The pulley was rigid, hard and machinable, made from cast iron for the purpose of rigidity since it would be subjected to tension from the belt as well as torque and speed

variations from the motor. A shaft was used based on design consideration, to match with the load to be subjected to thereby prevent bending and twisting. The bearing provided a frictionless circular motion for the shaft. The frame was made of 3 inches mild steel angle iron and was constructed into a trapezoidal shape to provide stability against the compressive force from the other parts of the machine; and help prevent vibration from the peeling drum and driver.

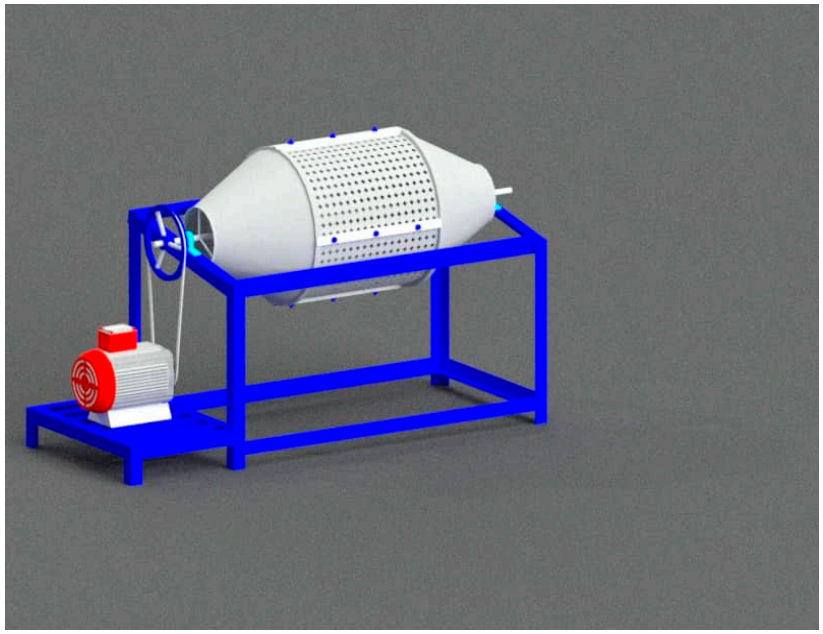

Figure 1. Model of the general purpose tuber-peeling machine.

2.4. Design Analysis

The general-purpose tuber peeling machine was designed bearing in mind the differences in the physical and the mechanical properties of the tubers under study. The machine was also designed such that it has a theoretical capacity of 10 kg/min and is can peel all tubers to a minimum efficiency of 65%. The materials of construction are readily available, and the capacity is higher than the manual peeling method. The labour input in a traditional method of peeling is considerably reduced and the complexity of mono-tuber peeler is also eradicated.

2.4.1. Determination of Volume of Peeling Drum

Since we know that the machine is designed to handle a 10 kg batch of tubers per min, theoretically, the mass of the tuber was taken as 10 kg. Also, preliminary studies showed that the average density of all the four tubers was 7850 kg/m^3. Thus, the volume occupied by the tuber was computed using Equation (1).

$$\rho = \frac{m}{v} \tag{1}$$

where,

m = mass of the tuber (10 kg)

ϱ = density of the tubers (7850 kg/m^3)

v = volume of the tubers (m^3)

The volume of the peeling drum was determined using Equation (2) [12].

$$V = \pi \frac{D^2 L}{4} \tag{2}$$

where,

L = length of the drum (mm)

D = diameter of the drum (mm)

V = volume of the peeling drum (mm^3)

We know that the average length of all the tubers was 520 mm from the study of the physical properties of the tubers. Hence, a drum length of 600 mm was used in the design. Also, from the study of the physical properties, we know that the average mass of all the tubers is 1200 g = 1.2 kg. Thus, the number of tubers accommodated in 10 kg was computed from Equation (3) [12].

$$n = \frac{m}{1.2} \tag{3}$$

where

n = number of tubers

Therefore, the diameter and the length of the drum used were 433.32 mm and 600 mm, respectively.

2.4.2. Determination of Tension in Belt

Consider the belt pulley system arrangement shown in Figure 2. The tensions in the belt were determined using Equation (3) [14].

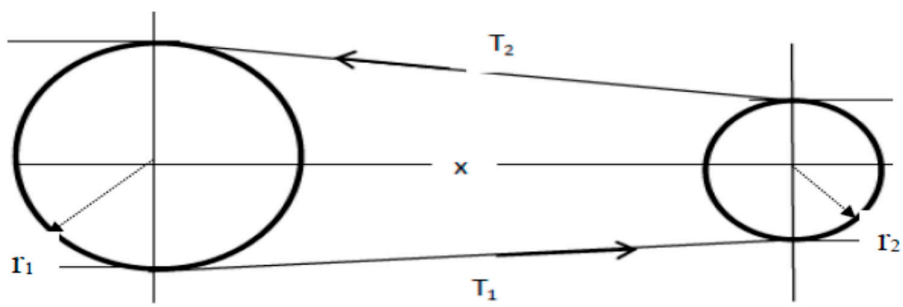

Figure 2. Design of length of belt.

$$2.3 \log\left(\frac{T_1}{T_2}\right) = \mu\theta \tag{4}$$

where,

θ = angle of wrap of an open belt

μ = co-efficient of friction = 0.3

T_1 = tension in the tight side of the belt (N)

T_2 = tension in the slack side of the belt (N)

The angle of lap was computed using Equations (5) and (6):

$$\sin \propto = \frac{r_1 - r_2}{x} \tag{5}$$

$$\theta = 180 \pm 2\sin^{-1}\left(\frac{r_1 - r_2}{x}\right) \quad (6)$$

where,

r_1 = radius of the machine pulley (mm)

r_2 = radius of the motor pulley (mm)

$\propto$ = angle of contact from belt (rad)

x = distance between the two pulleys (mm).

The belt speed and power transmitted were computed using Equations (7) and (8).

$$V = \frac{\pi DN}{60} \quad (7)$$

$$P = (T_1 - T_2)v \quad (8)$$

where,

D = diameter of driven pulley (80 mm)

N = speed of the motor (1460 rpm)

P = power transmitted (W);

v = speed of the belt (m/s)

T_1 and T_2 retained their usual meaning

2.4.3. Length of the Belt

For this design, the center distance C between the shaft pulley and motor pulley is given by the expression in Equation (9).

$$C = \left(\frac{D + d}{2}\right) + d \quad (9)$$

where,

D is the shaft pulley diameter (mm)

C_d is center distance (mm)

d is diameter of driver pulley (mm)

We know that a 3 HP motor has a speed of 1450 rpm and pulley diameter of 80 mm, thus we used this to evaluate the speed ratio using Equation (10):

$$N_1 D_1 = N_2 D_2 \quad (10)$$

where,

N_1 = speed of driven pulley

N_2 = speed of the electric motor (1460 rpm)

D_1 = diameter of the driven pulley

D_2 = diameter of the electric motor pulley (80 mm)

2.4.4. Power Requirement for Peeling Tubers

Power to peel the tubers is the power required to drive the peeling drum and this was computed using Equation (11).

$$P = T\frac{2\pi S}{60} \tag{11}$$

where,

P = power to turn the peeling drum (W)

S = speed of rotation of the drum (rpm). This was assumed to be 350 rpm, 530 rpm and 750 rpm.

T = torque on the peeling drum (Nm)

However, we know that the torque on the peeling drum is a function of the mass of the drum, which includes the tubers contained in it, radius of gyration and acceleration of free fall according to the expression in Equation (12).

$$T = m_d \times a \times r \tag{12}$$

where,

m = mass of the drum including tubers in it (kg)

a = acceleration of free fall (9.81 m/s^2)

r = radius of the peeling drum (0.217 mm)

T = torque (Nm)

Using the speed of the peeling drum of 530 rpm, as suggested by Kurmi and Gupter [14]for tubers, the velocity of the rotating drum was computed from Equation (13).

$$P = T \times s \tag{13}$$

Where,

P = power requirement for motor selection (W)

T = torque generated (Nm)

r = speed of the peeling drum (530 rpm)

2.4.5. Shaft Diameter

The size of the shaft diameter was computed using Equation (14) [14].

$$D_f{}^3 = \frac{16}{\pi S_u}(\sqrt{(K_t M_t)^2 + (K_b M_b)^2} \tag{14}$$

where,

D_f = shaft diameter (m)

M_b = bending moment (Nm)

M_t = torsional moment (Nm)

K_b = combined shock and fatigue factor for bending moment (1.5)

K_t = combined shock and fatigue factor for torsional moment (1.0)

S_u = allowable sheer stress for shaft with keyway of 40 MN/m^2 [15]

2.5. Component Parts of the Machine

The component parts of the machine are generally described in Figure 3. The machine is composed of a rotating drum built with wire gauze wounded on a frame made of iron rods and flat bars in a longitudinal manner. A shaft is made to pass through the centre of the drum supported at both ends with pillow bearings and at one end is mounted the pulley that enables the belt to be connected to the electric motor supported at the base with another frame. The entire component is

placed on a frame support big enough to give the required rigidity. The drum has only one opening where the tubers are fed and discharged while the peels or wastes are passed through the perforated portion.

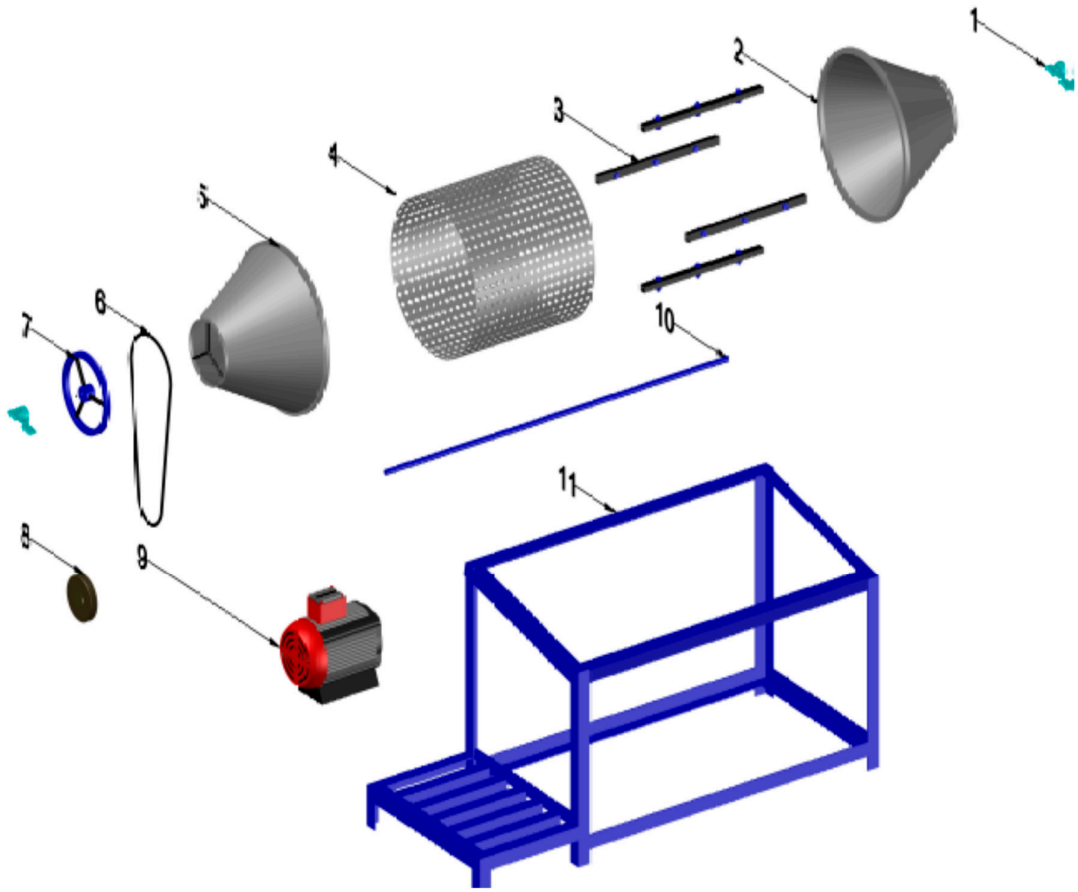

Figure 3. General machine description (1-handle; 2-right drum head; 3-rod; 4-wire gauze; 5—left drum head; 6-v-belt; 7- pulley; 8-motor seal; 9-electric motor; 10-shaft, 11- frame)

2.6. Machine Technical Parameters

Based on the design analysis of the tuber peeling machine, the values obtained are summarized as the technical parameters in Table 3.

Table 3. Machine technical parameters.

sn	components	Dimension	Value	SI Unit
1	Machine frame	Upper length	1130	mm
		Upper width	700	mm
		Height	700	mm
		Lower length	1130	mm
		Lower width	860	mm
2	Shaft	Length	1200	mm
		Diameter	30	mm
		Weight	8.202	kg
3	Bearing	Diameter	30	mm
		Weight	1.04	kg
4	Peeling drum	Length	600	mm
		Diameter	400	mm
		Weight	20	kg
5	Pulley	Diameter	220	mm
		Weight	1.348	kg
6	Motor	Speed	1460	rpm
		Power	3.0	HP
		Motor pulley diameter	80	mm
7	Belt	Length	717	mm
		Centre distance	230	mm
8	Capacity	Mass/time	10	kg/min

2.7. Bill of Materials and Measurement

The bill for engineering measurement and evaluation is shown in Table 4. Also, the bill for materials showing the make and model of each part of the system is shown in Table 5.

Table 4. Bill for engineering measurement and evaluation.

Part	Material Make	Specification	Quantity	Unit cost ($)	Total cost ($)
1	Pillow bearing	80 mm	2	5.48	10.96
2	Shaft rod	30 mm/1500 mm	1	13.7	13.7
3	Wire gauze	Galvanized hard net	1 length	16.4	16.44
4	Galvanized steel plate	2 mm thick half plate	½ plate	23.3	11.64
5	Iron flat bar	30 mm wide bar	½ length	19.2	9.589
6	Iron flat bar	½ inch wide	1 length	6.85	6.849
7	Iron rod	10 mm diameter	1 length	5.48	5.479
8	Iron rod	20 mm diameter	½ length	6.58	3.288
9	Hollow pipe ring	30 mm diameter	2	2.74	5.479
10	Angle iron	2 × 2 inches	3 length	11	32.88
11	Bolt/nuts with washers	Size 13	50 set	0.14	6.849
		Size 17	5 set		
		Size 19	5 set		
12	Binding wire	Thin wire	1 length	0.19	0.959
13	Lock and hangers	Door lock average size	1 set	0.27	1.37
14	Pulley	30 mm inner diameter	1	5.48	5.479
		220 mm			
		70 mm	1		
		300 mm	1		
15	Electrode	Gauges 10 and 12	1 pct each	1.37	1.37
16	Labour cost			5.48	5.479
	Total				188.5

Table 5. Bill for materials.

Part No.	Material	Make	Model
1	Handle	Galvanized iron rod, China	80 mm
2	Right-peeling drum head	Mild steel (MS), China	MS Mild steel 16 gauge
3	Wire gauze	Galvanized hard net, China	2 mm thick
4	Left drum head	Mild steel, China	MS Mild steel 16 gauge
5	v-belt	Vulcanized Rubber, US	Transmission, Type A
6	Pulley	Mild steel rod, China	16 guage
7	Motor seal	US	
8	Electric motor	3 Horse Power Electric Motor, China	1450 rpm, single phase
9	Shaft	Mild steel rod, China	
10	Bolt/nuts with washers	Mild steel, China	16 mm head or wrench size
11	Frame	Galvanized iron angle bar	16-guage angle iron bar

2.8. Construction Detailed Drawing

The isometric and orthographic projections of the peeling machine are shown in Figure 4.

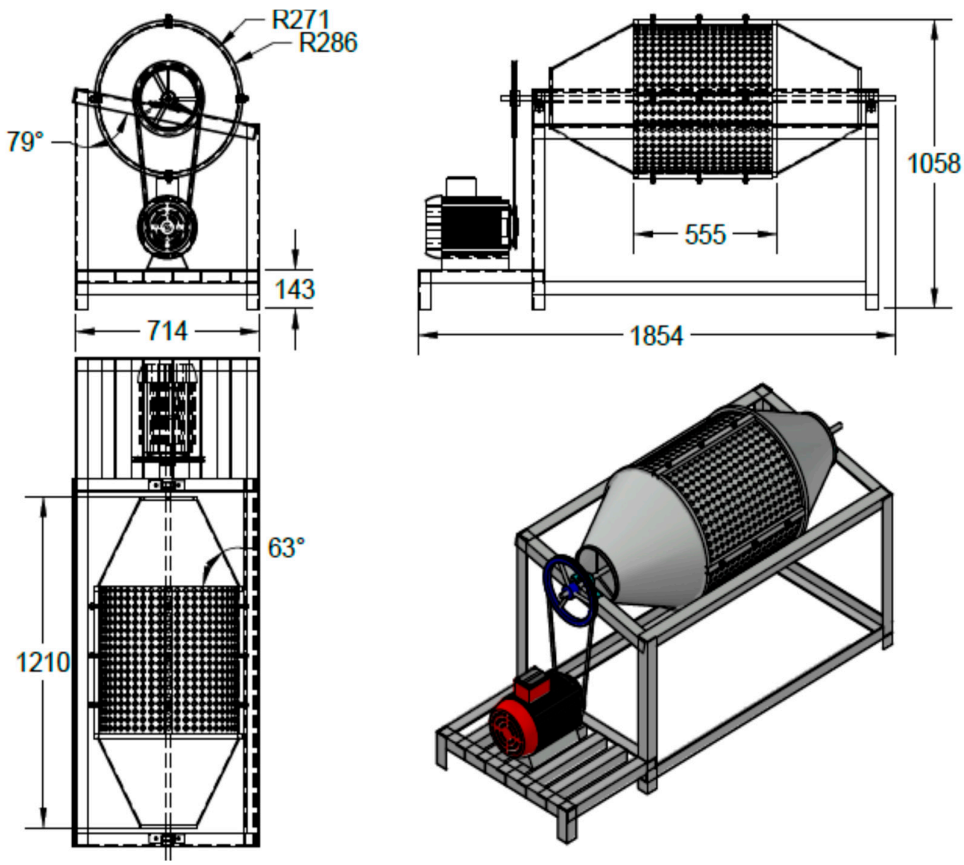

Figure 4. Isometric and orthographic projections of the tuber-peeling machine.

2.9. Performance Evaluation

2.9.1. Sample Preparation

We bought 10 kg of each tuber (cassava, potato, yam and cocoyam) from the main market in Omuaran, Kwara State, Nigeria. The tubers were cleaned to remove foreign matter, dust and dirt; and thereafter graded based on wholeness and freshness. Each of the tubers was fed gently through the inlet opening on the peeling drum, as shown in Figure 5. The machine was operated at three different speeds, namely 350 rpm, 530 rpm and 750 rpm with respect to 334, 220 and 156 mm driving pulley arrangements. The peeling force was applied to the tubers by the scraping and scratching

action of the rotating perforated wire gauze drum of the machine. The periderm or peeled flesh are discharged through the perforations and collected underneath the machine via a chaff collector bow, as shown in Figure 6. The machine performance was evaluated with respect to its throughput capacity, peeling efficiency and flesh loss efficiency. The procedure was replicated three times, and the average values recorded.

(**a**) (**b**)

Figure 5. Tuber peeling machine (**a**) Side view; (**b**) Front view.

(**a**) (**b**)

Figure 6. (**a**) Peeled cassava tubers; (**b**) cassava peels.

2.9.2. Determination of Peeling Efficiency

The peeling efficiency is the ratio of the throughput capacity to the theoretical capacity expressed as a percentage. This was determined, for each of the five tubers, using Equation (15), as given by Balami et al. [16] and Agrawal [17].

$$\varepsilon = \frac{M_{po}}{M_{pr} + M_{po}} \times 100 \quad (15)$$

where,

M_{po} = weight of peel collected through the peel outlet of the machine (kg)

M_{pr} = weight of tuber partially peeled in kg

ε = peeling efficiency

2.9.3. Determination of Percentage Weight of Peel and Flesh Loss

The percentage weight of peel and flesh loss were calculated using Equations (16) and (17), respectively [17].

$$W_p = \frac{M_p}{M_o} \times 100\ \% \tag{16}$$

$$\mathrm{FL} = \frac{\mathrm{M_f}}{\mathrm{M_o}} \times 100\ \% \tag{17}$$

where,

FL = flesh loss percentage (%)

W_P = percentage weight of peel (%)

M_P = weight of peel (kg)

M_f = weight of flesh removed (kg)

M_o = total weight of tuber (kg)

3. Results and Discussion

3.1. Physical Properties of Some Selected Tuber Crops

The results obtained for the physical properties of cassava, cocoyam, potatoes and yam are shown in Figures 7–9. The average tuber dimension and frontal area for cassava and yam tubers are more than those of sweet potato and cocoyam (Figures 7 and 8). The average tuber density is high for cassava followed by cocoyam and least for yam tuber as shown in Figure 9. The data obtained was used in the design of the tuber-peeling machine. For instance, the average tuber density was essentially used to determine the volume of the peeling drum in this investigation.

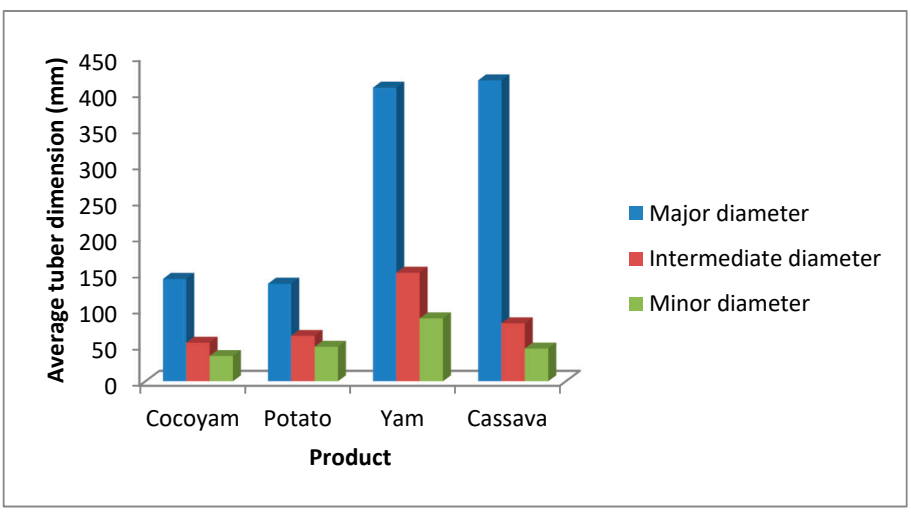

Figure 7. Comparison of tuber axial dimensions.

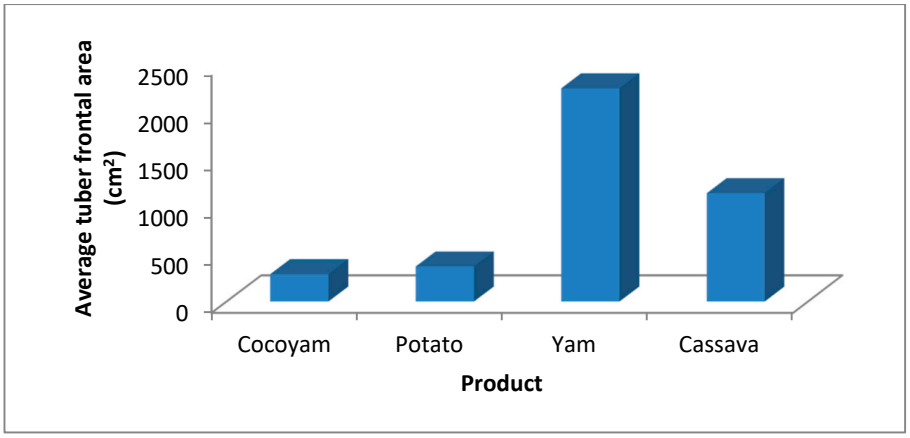

Figure 8. Comparison of tubers' frontal area.

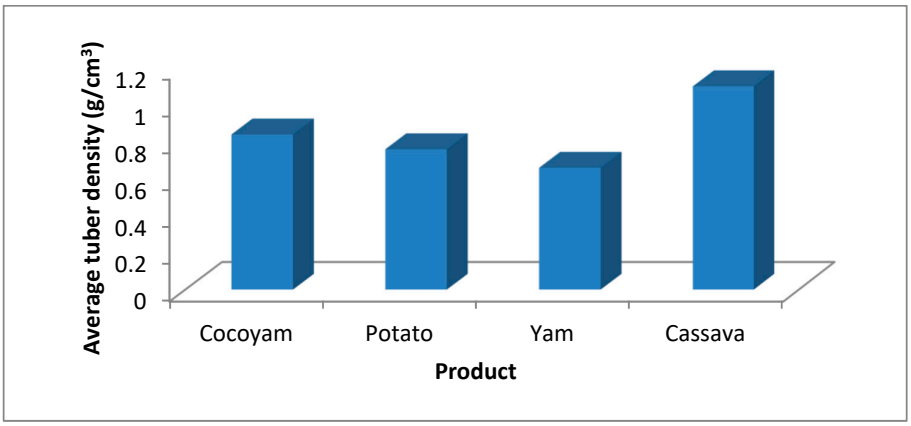

Figure 9. Comparison of tubers' density.

3.2. Effect of Shaft Speed on the Throughput Capacity

The effect of shaft speed on the throughput capacity of the machine is shown in Figure 10. The capacity of the machine increased with an increase in the speed of the machine for all the four tubers. Also, it was discovered that cocoyam has the highest throughput capacity followed by sweet potato. In a similar investigation, Olukunle and Jimoh [13] reported an increase of the throughput capacity of a cassava-peeling machine with an increase in the shaft speed. Also, Olukunle and Akinnuli [18] in their work on an automated cassava peeler reported that the throughput capacity increased with an increase in conveyor speed and decreased in the brush speed. This may mean that more tubers are peeled with an increase in the resident or peeling time.

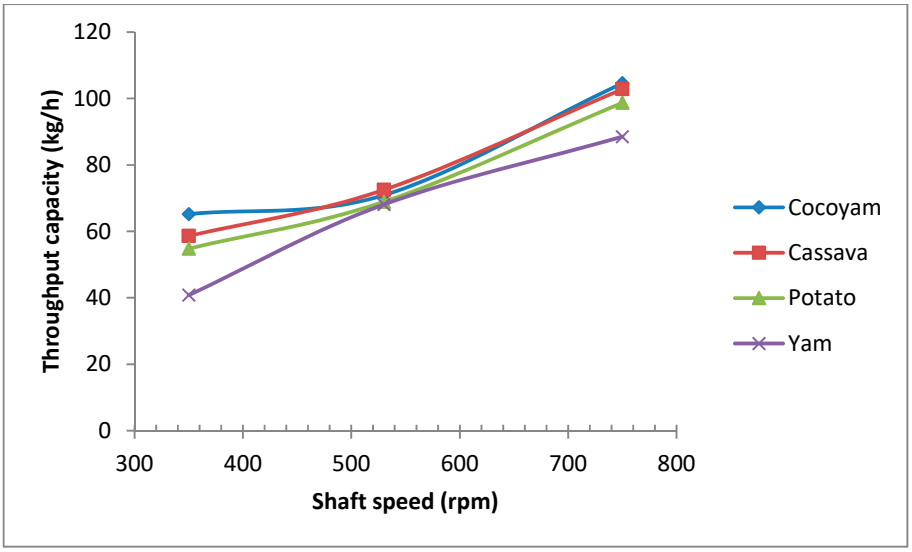

Figure 10. Effect of shaft speed on the throughput capacity.

3.3. Effect of Shaft Speed on the Peeling Efficiency

The effect of shaft speed on the peeling efficiency of the machine is shown in Table 6. The result revealed an increase in the efficiency of peeling for all the tubers with an increase in the shaft speed. It can be seen that the efficiency of the machine for cocoyam tuber peeling increased from 64.1% at speed of 350 rpm to 74.6% at 750 rpm. The machine efficiency increased from 41.4% to 63.8% with an increase in the speed of 350 to 750 rpm for cassava. Also, it appears that the machine is suitable for cocoyam peeling since it provided higher efficiency and lower flesh loss in comparison with the other tubers considered. The maximum peeling efficiency was obtained for cocoyam at a speed of 750 rpm, followed by sweet potato. The least efficiency was seen for yam and cassava at the speed of 350 rpm. The difference in the efficiency of the various tubers may not be unconnected with their size differences and moisture contents. The research efforts of Singh and Shukla [5], Olukunle and Jimoh [12], Olukunle and Akinnuli [18], Adetoro [19], Oluwole et al. [20], Jayashree and Visvanathan [21] and Balami et al. [22] who reported effects of shaft speed on peeling efficiency of various tubers corroborate the present investigation. Thus, the peeling efficiency was higher for cocoyam tubers than the other tubers considered.

Table 6. Effect of shaft speed on the peeling efficiency.

Runs	Speed	Product	Peeling efficiency (%)
1	350	Cocoyam	64.1
7	530	Cocoyam	70.6
5	750	Cocoyam	74.6
4	350	Cassava	41.4
6	530	Cassava	57.4
1	750	Cassava	63.8
8	350	Potato	64.8
2	530	Potato	69.5
12	750	Potato	72.3
9	350	Yam	40.2
11	530	Yam	52.4
10	750	Yam	61.1

3.4. Effect of Shaft Speed on the Flesh Loss and the Weight of Peel

The amount of tuber waste produced was estimated as a function of the tuber flesh loss and the percent weight of peels. The effect of shaft speed on the tuber flesh loss and percentage weight of peel are shown in Figure 11 and Figure 12, respectively. The flesh loss and percent weight of peels increased with an increase in the shaft speed. Obviously, there are more flesh losses with an increase in the speed for all other tubers except cassava (Figure 12). The reason for this may not be unconnected with the clear differences in the shapes and sizes of the tubers. It is possible to reduce the amount of tuber wastes generated by increasing the shaft speed. However, this will require proper sorting of the tubers based on size. Also, the percent weight of peels and tuber flesh loss were found to be slightly less than 20% and 22% of the total weight of the tubers peeled. These values are slightly less than those reported by Olukunle and Jimoh [12], Olukunle and Akinnuli [18], Adetoro [19] and Oluwole et al. [20]. Consequently, the machine can reliably be used for cassava, cocoyam, yam and sweet potato peeling.

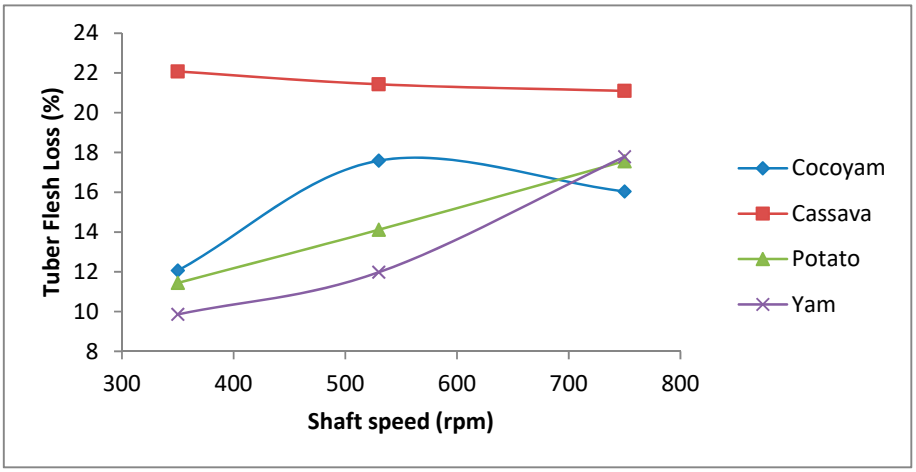

Figure 11. Effect of shaft speed on the flesh loss efficiency.

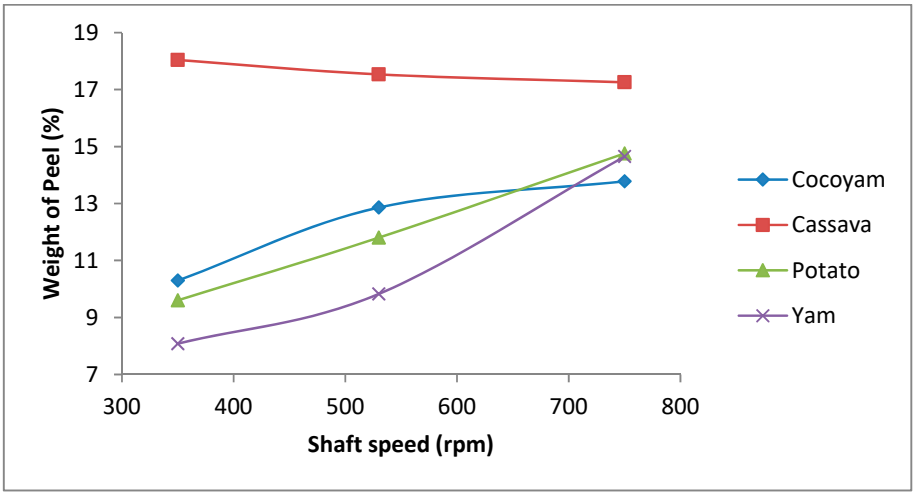

Figure 12. Effect of shaft speed on the percentage weight of peel.

4. Conclusions

A simple tuber peeling machine has been designed and fabricated for peeling different kind of tubers irrespective of size and shape of the products. The machine was designed to operate at the speed range of 350–750 rpm and time range of 5–12 min based on the principle of surface scratching. The performance of the machine was determined with respect to the peeling efficiency, weight of

peel and tuber flesh loss. The results showed that the peeling efficiency increased with an increase in the shaft speed for all the tubers. Effective peeling was achieved for all the tubers since the amount of flesh loss and percent weight of peel were only 20% and 25% of the total weight of the tubers, respectively. The machine is easy to operate, and it can be afforded by commercial tuber processors and small-scale processors.

Author Contributions: Conceptualization, A.F.; Data curation, O.F.A.; Formal analysis, O.F.A.; Funding acquisition, A.F.; Methodology, A.F.; Project administration, A.F.; Supervision, A.F.; Writing—original draft, O.F.A.; Writing—review and editing, A.F. All authors have read and agreed to the published version of the manuscript.

Funding: This research received no external funding.

Conflicts of Interest: The authors declare no conflict of interest.

Abrebiations

Symbol	Meaning	SI Unit
m	Mass of tuber	kg
P	Density of tuber	kg/m^3
V	Volume of tuber	m^3
L	Length of the peeling drum	mm
D_d	Diameter of the peeling drum	mm
V	Volume of the peeling drum	mm^3
n	Number of tubers	pieces
μ	Coefficient of friction	-
T_1	Tension on tight side of the belt	N
T_2	Tension on slag side of the belt	N
α	Angle of contact from belt	rad
x	Distance between pulleys	mm
D	Diameter of the driven pulley	mm
N	Speed of electric motor	rpm
P	Power transmitted	W
c_d	Centre distance	mm
S	Speed of rotation of the drum	rpm
T	Torque on the peeling drum	Nm
m_d	Mass of drum including tuber in it	kg
D_f	Shaft diameter	mm
ε	Peeling efficiency	%
M_{po}	Weight of peels collected via outlet	kg
M_{pr}	Weight of tuber partially peeled	kg
W_p	Percent weight of peels	%
FL	Tuber flesh loss	%
M_p	Weight of peels	kg

References

1. FAO. *FAO Production Year Book*. Food and Agricultural Organization of the United Nations: Rome, Italy, 1990.
2. FAO. *FAO Production Year Book*. Food and Agricultural Organization of the United Nations: Rome, Italy, 1993.
3. Abdulkadir, B.H.: Design and Fabrication of a Cassava Peeling Machine, *IOSR J. Engin. (IOSRJEN)* **2012**, *2*, 1–8.
4. Odigboh, E.U. Model III batch process cassava peeling machine. In Proceedings of International Conference of Agricultural Engineering, Westin Hotel, Seattle, Washington, U.S.A., September 19–22, 1988.
5. Singh K.K.; Shukla, B.D. Abrasive Peeling of Potatoes. *J. Food Eng.* **1995**, *26*, 431–442.
6. Suter, M.L.; FMC Technologies Inc. 2002. *Peeling apparatus having feeder control based upon load and associated methods*. U.S. Patent 6,431,061, 13 August 2002.
7. Akintunde, B.O. Oyawale, F.A.; Tunde- Akintunde, T.Y.: Design and fabrication of a cassava peeling Machine. *Niger. Food J.* **2005**, 23, 231–238.

8. Adetan D.A.; Adekoya,L.O.; Aluko, O.B.; Mankanjuola,G.A. An experimental mechanical cassava tubers peeling Machine. *J. Agric. Eng. Technol.* (JAET) **2005**, *13*, (113):27-34.
9. Agbetoye, L.A.S. Development in Cassava Harvesting Mechanization. *West Indian J. Eng.* **1999**, *22*, 11–19.
10. Emadi, B.; Kosse, V.; Yarlagadda, P. Abrasive Peeling of Pumpkin. *J. Food Eng.* **2007**, *89*, 448–452.
11. Olukunle, O.J.; Jimoh, M.O. Comparative Analysis and Performance Evaluation of three Cassava Peeling Machines. *Int. Res. J. Eng. Sci. Technol. Innov. (IRJESTI)* **2012**, *1*, 94–102.
12. Jimoh, O.M.; Ademosun, C.O.; Olukunle J.O. Effect of Physical and Mechanical Properties of Cassava Tubers on the Performance of an Automated Peeling Machine. *Niger. J. Eng. Appl. Sci.* **2012**, *5*, 47–60.
13. Fadeyibi, A., and Osunde Z.D. (2012). Thermo-physical properties of Rubber Seed useful in the Design of Storage Structure: *Int. J. Agric. Biol. Eng.* **2012**, *5*, 62–66.
14. Khurmi R.S.; Gupta J.K. *Textbook of machine design*, 25th Edition; S. Chand & Co. Ltd, 2005
15. Rajput, R.K. Elements of mechanical engineering. Lakshmi publishers: New Delhi, India, 2013.
16. Balami, A.A.; Mohammed, I.A.; Adebayo, S.E; Adgidzi, D.;Adelemi, A.A. The Relevance of Some Engineering properties of Cocoyam (Colocasia Esculenta) in the Design of Post-harvest processing Machine. *Acad. Res. Int.* **2012**, *2*, 53–59.
17. Agrawal, Y.C. Ginger Peeling Machine Parameters. *Agric. Mech. Asia Afr. Lat. Am.* **1987**, *18*, 59–62.
18. Olukunle O. J.; Akinnuli B. O. Theory of an Automated Cassava Peeling System. *Int. J. Eng. Innov. Technol. (IJEIT)* **2013**, *2*,(8):177-84.
19. Adetoro, K.A. Development of a Yam Peeling machine. *Global Adv. Res. J. Eng. Technol. Innov.* **2012**, *1*, 085–088.
20. Oluwole O.O.; Adio M.A. Design and Construction of a Batch Cassava Peeling Machine. *J. Mech. Eng. Automat.* **2013**, *3*, 16–21.
21. Jayashree, E. ;Visvanathan, R. Studies on Development of Concentric Drum, Brush type Ginger Peeling. *Agric. Mech. Asia Afr. Lat. Am* **2014**, *45*, 82–87.
22. Balami, A.A.; Dauda, S.M; Mohammed, I.S.; Agunsoye, J.K.; Abu, H.; Abubakar, I.; Hamad, D. Design and Fabrication of a Cocoyam (Colocasia Esculauta) Peeling Machine. *Internet Food Res. J.* **2014**, *23*, 565–570.

© 2020 by the authors. Licensee MDPI, Basel, Switzerland. This article is an open access article distributed under the terms and conditions of the Creative Commons Attribution (CC BY) license (http://creativecommons.org/licenses/by/4.0/).

View publication stats