ResearchGate

See discussions, stats, and author profiles for this publication at: https://www.researchgate.net/publication/352919183

Development of a dually operated biomass briquette press

Article *in* Songklanakarin Journal of Science and Technology · July 2021

DOI: 10.14456/sjst-psu.2021.97

CITATIONS
2

READS
861

2 authors:

Adeshina Fadeyibi
Kwara State University
67 PUBLICATIONS **301** CITATIONS

SEE PROFILE

Kehinde Adebayo
Uniabuja
4 PUBLICATIONS **31** CITATIONS

SEE PROFILE

Some of the authors of this publication are also working on these related projects:

Project CONCEPTUAL DESIGN AND SIMULATION OF AFRICAN OIL BEAN SEED DEHULLER View project

Project Development and characterisation of cassava starch-zinc nanocomposite films for fruits and vegetables packaging View project

All content following this page was uploaded by Adeshina Fadeyibi on 02 July 2021.

The user has requested enhancement of the downloaded file.

Songklanakarin J. Sci. Technol.
43 (3), 737-743, May - Jun. 2021

http://www.sjst.psu.ac.th

Original Article

Development of a dually operated biomass briquette press

Adeshina Fadeyibi* and Kehinde Raheef Adebayo

Department of Food and Agricultural Engineering, Faculty of Engineering and Technology, Kwara State University, Malete, P.M.B. 1530 Ilorin, Kwara State, Nigeria

Received: 17 February 2020; Revised: 7 April 2020; Accepted: 18 May 2020

Abstract

Technological transformation of biomass residues into briquettes is essential for industrial energy applications. This research was undertaken to design, fabricate, and test a dually operated screw press for briquette production. The machine was designed and fabricated using 0.3%-carbon steel, and its performance was evaluated for 30 min at an interval of 5 min. The efficiency increased with an increase in the resident time, and the values were approximately 95% and 80% at the end of the 30 min motorized and manual operations, respectively. The average capacity of the manual operation was 0.0025 kg s^{-1} and that of the motorized operation was 0.0055 kg s^{-1}. A single phase two horsepower electric motor was used to power the machine.

Keywords: design, fabrication, agricultural residues, performance

1. Introduction

Agricultural product value addition can be described as a technical procedure for residue management in the postharvest chain. When new materials, such as the briquettes, are formed from agricultural residues, they can serve an additional source of income for the industry. A briquette is a compressed block of combustible agricultural residues used for energy generation at home and industries. The energy value of many types of the biomass residues has been harnessed to meet the growing domestic and industrial demands for clean energy worldwide (Demirbas, 2004; Goyal, Seal, & Saxena, 2008; Paré, Bernier, Thiffault, & Titus, 2011).

Briquetting is a high-pressure technique, like the pelletizer, essentially used for biomass compaction (Hiloidhari, Moonmoon, Das, & Baruah, 2014). One of the features of a typical pellet press is that the dies are often arranged as holes bored in a thick metal plate. The material is normally conveyed to the die head, where they are compressed into solid substance. This is followed by cutting into sizes about one or two times the diameter of the original substance to obtain the briquettes. The heat die extrusion machine is another type of industrial screw press essentially used for briquetting. This machine uses screw, electric die heater, smoke trapping system and a muff to compress the raw materials into briquettes (Grover & Mishra, 1996).

Major drawbacks of the briquetting technology are the high initial capital involved in the procurement of the machines, which can only be afforded by specialized industries. The high cost of electricity consumption and the cost of replacing worn out machine parts are yet another challenges (Orhorhoro, Kelly, Chukudi, Oghenekevwe, & Onogbotsere, 2017). Also, the machines described in the previous designs operate rather slowly and are typically used for low outputs briquettes. There is therefore the need to design a low-cost briquette press, which is simple to use or less cumbersome than the other previously reported designs, in order to address these challenges. The design of a low cost dually operated briquetting press has not been reported hitherto. There is therefore the need to design a new and affordable press for the briquetting operation. The objective of this research therefore was to design, fabricate and test a dually operated screw press for producing charcoal briquettes from biomass residues.

2. Materials and Methods

2.1 Materials selection for screw press design

The material selected for construction of the screw press is a medium carbon steel of 0.3%-carbon, which is high

*Corresponding author
Email address: adeshina.fadeyibi@kwasu.edu.ng

in strength, and has a good ductility with a moderate hardness. It has a good machinability to be formed into shape and is readily available in the market. In the design, it was ensured that the stress level of the steel was below the yield point (456×10^6 N m^{-2}) to ensure safety.

2.2 Design considerations for screw press

The design of the briquetting press involved the calculation of the size of the hopper, helix geometry, size of the belt and the power requirement for motor selection. Based on literature findings and preliminary investigations, the information in Table 1 was assumed in the design.

Table 1. Design considerations and assumptions

s/n	Consideration and assumptions	Value	Unit
1	Capacity of the briquetting machine	50	kg h^{-1}
2	Length of the hopper	347	mm
3	Height of the hopper	226	mm
4	Width of the hopper	113	mm
5	Length of the briquette	100	mm
6	Slip should not occur at the walls		
7	Raw biomass should be incompressible		
8	Gravity forces should be negligible		
9	Inertial forces should also be negligible		

(Fadeyibi, Osunde, Agidi, & Egwim, 2016; Bhattacharya, Leon, & Rahman, 2002)

2.3 Theoretical description of the briquetting press

The motion of briquette composite in the barrel of the machine can be described using the vector analysis of the motion of the briquette particles in a Cartesian plane (Dreizler & Lüdde, 2010). The position vector of the particles can be expressed in Equation (1) or in the standard vector abbreviation in Equation (2) (Fitzpatrick, 2006; Vasilenko, 1996).

$$r(t) = (Rcos\omega t)i + (R\sin\omega t)j \ + \ 0k \quad (1)$$

$$r(t) = (R\cos\omega t, R\sin\omega t, 0) \quad (2)$$

where r (t) is the position vector of the briquette particle at time t (s), ωt the angle of rotation of the briquette particle (deg.), R the amplitude of a moving briquette particle from rest position (m), and i, j, k are the cartesian coordinates in $\mathbb{R}^3$.

The vector's terminal point approaches the position of the particles of the biomass briquette, as the particles move from right to left starting from the position r (0) = (R, 0, 0). Integrating Equation (1) with respect to time (t), the velocity vector of the motion of the briquette particles is obtained as in Equation (3). The magnitude of the velocity vector is $|v| = R\omega$, and its direction is time bound. Moreover, the relationship between the velocity and the position vectors is a right angle if r (t). v (t) = 0. This means that the velocity vector rotates in a similar manner as the position vector (Fitzpatrick, 2006).

$$dr(t)/dt = d[(Rcos\omega t)i + (R\sin\omega t)\,j \ + \ 0k]/dt$$

$$v(t) = (-R\omega\sin\omega t, R\omega\cos\omega t, 0) \quad (3)$$

where, $v\ (t)$ is the velocity vector of the motion of the briquette particles (ms^{-1}) in $\mathbb{R}^3$, R, *and* ωt and t retain their meaning as stated previously.

The velocity vector of the composition of the briquette composites, or the hodograph can be represented in a parametric form with 3-D space geometry, namely $\dot{x}$ (t), $\dot{y}$ (t) and $\dot{z}$ (t). We can also describe the acceleration vectors, $a\ (t)$ of the uniform circular motion of the briquette composites using Equation (4), which is obtained by integrating the velocity vector with respect to the time, t. This is the centripetal acceleration and its magnitude is independent of time, as expressed in Equation (5) (Vasilenko, 1996).

$$d(v(t))/dt = d(-R\omega\sin\omega t, R\omega\cos\omega t, 0)/dt$$

$$a(t) = (-\omega^2 R\cos\omega t, -\omega^2 R\sin\omega t, 0) \ = \ -\omega^2 r(t) \quad (4)$$

$$a(t) \ = \ |a(t)| \ = \ \omega^2 R \quad (5)$$

Thus, $a(t) \equiv a = \omega v = v^2/R$

where, $a\ (t)$ is the acceleration vector of the motion of the briquette particles (ms^{-2}) in $\mathbb{R}^3$, and R, ωt and v (t) retain their meaning as stated previously.

Furthermore, the motion of the screw towards the compression stage of the press can be described as non-uniform motion with a constant circular frequency with a magnitude of ω (t). The position vector and the resulting velocity vector are given in Equation (6) and Equation (7), respectively (Dreizler & Lüdde, 2010).

$$\mathrm{r(t)} \ = \ (\mathrm{R}\cos\omega(\mathrm{t}), \mathrm{R}\sin\omega(\mathrm{t}), 0) \quad (6)$$

$$\mathrm{v(t)} \ = \ (-\mathrm{R}\dot{\omega}\ (\mathrm{t})\sin\omega(\mathrm{t}), \mathrm{R}\dot{\omega}\ (\mathrm{t})\cos\omega(\mathrm{t}), 0) \quad (7)$$

where, $\dot{\omega}$ is the angular velocity of the briquette particles rotating inside the barrel (ms^{-1}), and v (t), R and r (t) retain their meaning as stated previously.

The velocity vector varies at every point on the circle, with its direction perpendicular to the axis of rotation of flighted screw. The magnitude depends, however, on time in this case ($v = |R\dot{\omega}\ (t)|$). The vectors r and v are said to be orthogonal, as expressed in Equation (8) (Dreizler & Lüdde, 2010; Fitzpatrick, 2006; Vasilenko, 1996)

$$r(t) \cdot v(t) = 0 \quad (8)$$

However, the vector form of Equation (13) shows more clearly that the acceleration is not central for a non-uniform, circular motion as expressed in Equation (9) (Dreizler & Lüdde, 2010).

$$a(t) = (\ddot{\omega}\ (t)/\dot{\omega}(t))\ v(t) - \dot{\omega}(t)^2 r(t) \quad (9)$$

where, $a\ (t)$ is the acceleration of the motion of the briquette particles (ms^{-2}) in $\mathbb{R}^3$, $\ddot{\omega}$ = the angular acceleration of the briquette particles rotating inside the barrel (ms^{-2}), and $\dot{\omega}$ and r (t) retain their meaning as stated previously.

2.4 Machine component parts

The component parts of the briquetting press are shown in Figure 1. The densification of solid biomass is

S/N	COMPONENTS
1	HOPPER
2	BRIQUETTING CHAMBER
3	CIRCULAR DIE
4	MAIN HOUSING
5	HAND CRANK ROLLER
6	DRIVEN PULLEY
7	WORM
8	SPOUT
9	ENGINE SEAT
10	MAIN FRAME

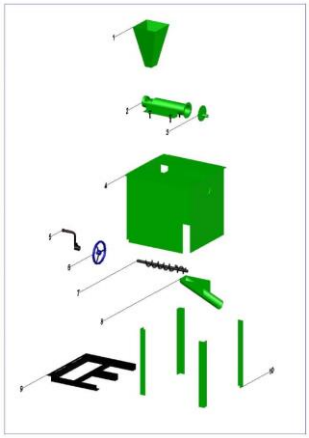

Figure 1. Component parts of the briquetting press

2.5 Design analysis

The machine was designed by analyzing the hopper capacity, selecting die helix geometry, belt length for conveyance, and computing the bearing capacity.

2.5.1 Feeding hopper

The hopper was provided for feeding the mixture of the carbonized biomass, binder and water into the barrel (Figure 2). The Jenike hopper and silos design procedure for bulk solids was used in this investigation. This suggests that the size of the hopper be computed to accommodate 50% of the total biomass volume per feed so as to avoid flow problem (Fadeyibi, Osunde, Agidi, & Evans, 2014; Fadeyibi *et al.*, 2016). Hence, Equation (10) was used to compute the volume of the hopper.

2.5.2 Die selection

Since a briquette of 25 mm diameter is expected, an extruder pipe extension of 25 mm internal diameter and 100 mm length was attached by welding to the die disc which has a bore diameter of 25 mm.

2.5.3 Deign of helix

The helix angle is the angle that the helix (worm) flights with the vertical. This angle varies for different screws depending on the design and application. The helix angle of the screw depends on the pitch and the diameter of the screw. In this investigation, we assumed a pitch of 25 mm, shaft diameter of 25 mm, and the screw diameter of 95 mm (Fadeyibi *et al.*, 2016). Based on this, the helix angle was computed using Equation (11).

$$\theta = \tan^{-1} s/\pi D \quad (11)$$

where, θ is the helix angle, S the pitch of the screw (mm), and D the screw diameter (mm).

Assuming the number of turns of screw as three and allowing for additional 100 mm length to accommodate pulley features and bearing arrangement, the length of the screw press was therefore computed from Equation (12).

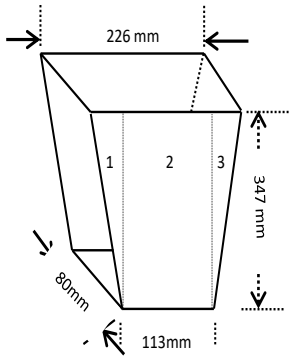

Figure 2 Feeding Hopper

$$L = nt + 100 \quad (12)$$

where, L is the briquette screw length (mm), and n the number of wounds of screw flight.

2.5.4 Design of belt

We used a cotton belt of 6 mm thickness because it provides up to 70% efficiency and requires very little maintenance (Khurmi & Gupta, 2005). The length of the belt was computed using Equation (13).

$$L_x = (D_1 + D_2)\pi/2 + (D_1 - D_2)^2/4C + 2C \quad (13)$$

where, L_x is the belt length (mm), D_1 the driving pulley diameter (mm), D_2 the driven pulley diameter (mm), and C the center distance between the driven and driving pulleys (mm).

2.5.5 Power requirement of the screw press

The power requirement of the machine was computed from Equation (14). In order to ensure consistency in the screw flight operations, we assumed the velocity of the worm shaft under load to be 0.29 m/min in the power calculation. We also considered the thread efficiency of 40% from the worm, frictional loss efficiency of 20% and a belt drive efficiency of 70% to ensure better machine performance in the briquetting process.

$$P = Fv(n+1)/\beta\varepsilon \quad (14)$$

where F is the briquetting force (N), β the thread efficiency (%), ε the belt drive efficiency (%), n the frictional loss efficiency (%), v the velocity of the worm (m/s), and P the total power requirement (W).

2.5.6 Briquetting stand

The stand was made up of 16-gauge angle iron bar with 5 mm thickness. The total weight of the base stand was 15 kg. The dimensions of the bolts used were 10 mm diameter and 16 mm head or wrench size. A total of 12 bolts were used to hold the briquetting frame in position. The electric motor and the barrel are fitted on the briquetting stand.

2.5.7 Technical drawing and characteristics of machine

The orthographic and isometric projections of the briquetting press are shown in Figure 3. Also, the detailed results obtained from the design analysis of the machine are summarized in Table 2. The machine was fabricated according to the dimensions specified in the design analysis.

2.6 Performance evaluation

2.6.1 Production of briquettes

A performance evaluation of the machine was carried out using 10 kg melon seed shells obtained from Idofian Farms Ilorin, Kwara State. The biomass material was transported to the National Centre for Agricultural Mechanization (NCAM), where a hammer mill was used to reduce the particle size to approximately 20 mm diameter. The biomass residue was thereafter carbonized by burning in a ring-shaped metal airtight container for 15 min to form the carbonized sample. A blend of 0.39 kg of the carbonized biomass sample with 0.40 kg of starch, which was used as a binding agent, and 0.04 kg of water was fed into the press for briquetting. The approximate size of the briquettes produced by the machine was 25×25 mm in dimension, and the moisture content was 4% (wet basis) after 24 hrs drying. A Universal Tensile Testing Machine (Model number: M500, 100AT) was used to determine the compressive strength of the resulting briquettes, and the average value of the strength was found to be 2.45 kNm^{-2}. The method described by Jamradloedluk and Wiriyaumpaiwong (2007) was used to determine the bulk density of the briquette sample, and the average value of the bulk density was found to be 200 kg m^{-3}.

2.6.2 Determination of throughput capacity and efficiency

The machine throughput capacity was determine as the ratio of mass of briquette, produced by the biomass briquette machine, to the average time used in the production of the briquette (Aqa & Bhattacharya, 1992). The mass of the briquette was measured after every 10 min machine operation. Equation (15) was used to compute the throughput capacity of the machine.

$$C_t = m_b / t_b \quad (15)$$

where C_t is the throughput capacity (kg/s), m_b the mass of briquette produced at time t (kg), and t_b the briquette production time (s).

Machine efficiency is the ratio the mass of sample feed into the machine to the mass of the briquette produced by the material (Yisa, Fadeyibi, & Salman, 2018). This indicates the amount of the useful work executed by the machine. Theoretically, the machine efficiency is 100% for an ideal material machine system. However practically, this efficiency is often be less than 100% because there may be some materials and energy losses in the briquetting process (Fadeyibi *et al.*, 2016). In this investigation, the machine efficiency was calculated in Equation (16).

$$\phi = W_f / W_b \times 100 \quad (16)$$

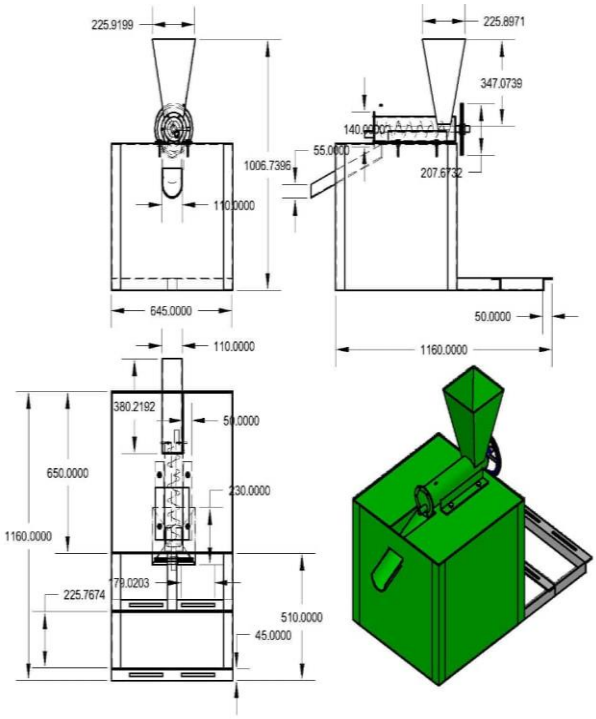

Figure 3. Orthographic and isometric projections

Table 2. Technical parameters of the machine

s/n	Parameter	Value	SI Unit
1	Volume of feeding hopper	3921100	mm^3
2	Diameter of extrusion pipe	25	mm
3	length of the screw	100	mm
4	helix angle	15.01	deg.
5	Pitch	80	mm
6	Number of wounds of screw flight	3.0	turns
7	Briquette screw length	340	mm
8	belt length	1.439	mm
9	Briquette force	47.13	N
10	Power requirement	0.785	kW
11	Motor Size selected	2.0	HP (1445 rpm)

where ϕ is the machine efficiency, (%), W_b the mass of sample feed into the machine (kg), and W_f the mass of briquette produced (kg).

2.6.3 Statistical analysis

A one-way t-test approach was used to hypothetically compare the bulk density and the compressive strength of the briquette produced from the melon seed shells with the properties reported for briquettes obtained from other biomass sources ($p<0.05$).

3. Results and Discussion

The effects of resident time on the machine efficiency and throughput capacity for the manual and motorized operations are shown in Figure 4 and Figure 5. The efficiency increased with an increase in the resident time, and the values

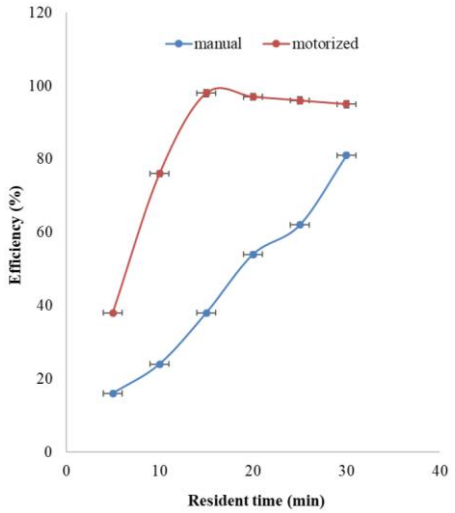

Figure 4. Effect of resident time on machine efficiency

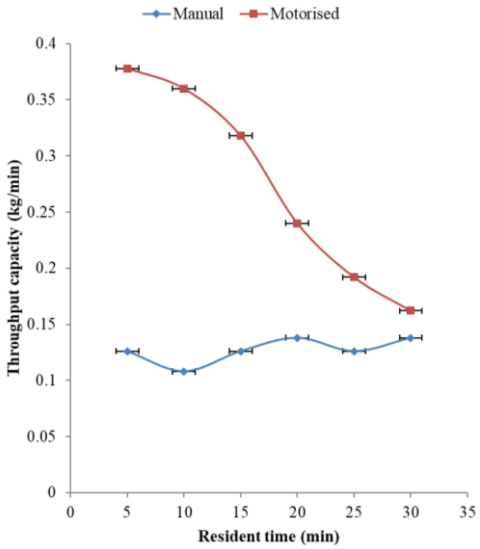

Figure 5. Effect of resident time on throughput capacity

were approximately 95% and 80 % at the end of the 30 min motorized and manual operations, respectively. The average capacity of the manual operation was 0.0025 kgs^{-1} and that of the motorized operation was 0.0055 kgs^{-1}. Just as expected, the throughput capacity decreased with an increase in the resident time of machine operation.

A smooth operation of the press with no operational difficulties was observed during the manual operation in the first 15 min. But the efficiency eventually decreased with time, probably because of the effect of fatigue experienced by the operator. The research findings of Obi, Akubuo, and Nwankwo (2013), Orhorhoro *et al.* (2017), Nordiana (2010) and Olorunnisola (2004) corroborate the findings of the present investigation. Obi *et al.* (2013) design a briquetting machine for use in rural communities and reported a capacity of the machine to be 43 kgh^{-1}. Orhorhoro *et al.* (2017) designed and fabricated a manually operated briquetting machine and reported 70% machine efficiency. Nordiana (2010) designed and fabricated an electrically operated briquetting press for producing a solid circular briquette from biomass residues. Olorunnisola (2004) developed a machine for briquette formation involving from chopped rattan mixed with cassava starch paste, producing 25 mm in length of briquette. Thus, performance of the new briquetting press is comparable to the other existing machines. A comparison of the density and compressive strength of the briquette obtained from the melon seed shells with the briquettes obtained from other biomass sources is shown in Table 3. The measured properties are comparable to those of the briquettes formed from rice husk blend (Kargbo, Xing, & Zhang, 2010). The properties also agreed with those reported for coffee husks, cotton stalks, farm grass, maize stalks and cobs, soybean Stover, sun flour stalk biomass residues (Chaiklangmuang, Supa, & Kaewpet, 2008; Eriksson & Prior, 1990; Plíštil, Brožek, Malaták, Roy, & Hutla, 2005). The properties of charcoal briquettes from the water hyacinth molasses and misconthus blends have been reported (Carnaje, Talagon, Peralta, Shah, & Paz-Ferreiro, 2018; Wu, Zhang, Wang, Mu, & Huang, 2018), but this gives a lower compressive strength values compared to the briquette from the melon seed shells ($p < 0.05$). In contrast, higher compressive strength and density values for the briquettes from sawdust, sugar-cane bagasse fly ash and grasses have been reported ($p<0.05$)

Table 3. A comparison of strength and density of some biomass briquettes

Biomass source	Briquette property		Reference
	β (kgm^{-3})	∫ (kNm^{-2})	
Water hyacinth-mollases blend	840	19.1	Carnaje *et al.* (2018)
Biomass-Lignite blend	189	10-30	Chaiklangmuang *et al.* (2008)
Switchgrass blend	946-173	21.0	Mani *et al.* (2006)
Wheat Straw blend	24-121	15.3	Kalyan & Morey (2009).
Rice husk blend	50-120	18.7	Kargbo *et al.* (2010)
Misconthus blend	130-150	2.56	Wu *et al.* (2018)
Coffee husk	160	2.12	Plíštil *et al.* (2005)
Cotton stalk	184	1.98	Eriksson & Prior (1990)
Bagasse blend	635	31.8	Teixeira *et al.* (2010), Erlich *et al.* (2005)
Grasses	179	1.28	Mani *et al.* (2006)
Sawdust	613	121	Antwi-Boasiako & Acheampong (2016)
Melon seed blend	200	2.45	This study

β – bulk density; ∫– compressive strength

(Antwi-Boasiako, & Acheampong, 2016; Erlich, Öhman, Björnbom, & Fransson, 2005; Mani, Tabil, & Sokhansanj, 2006; Teixeira, Pena, & Miguel, 2010). This implies that there is no significant difference between the properties of the briquettes produced by this new machine and those reported in literature. In general, the strength and density of the briquettes produced had been either higher or comparable to briquettes made from different biomass sources. Thus, the dually operated screw press can be used for biomass briquette formation.

4. Conclusions

A dually operated screw press for use in the production of briquettes from agricultural residues has been designed, fabricated and tested. The efficiency of the machine was found to increase with an increase in the resident time while the throughput capacity decreased with an increase in the resident time of machine operation. Also, efficiency and throughput capacity were higher in the motorized than in the manual operations. The compressive strength and bulk density of the briquette samples from the melon seed shells are comparable with those reported for other biomass sources at $p<0.05$. Thus, the dually operated screw press can generally be used for biomass briquettes production.

Acknowledgements

The authors would like to thank the Tertiary Education Trust Fund (KWASUNGR/CSP/171117/VOL4/ TETF/0044**)** of the Federal Ministry of Education, for providing financial support for this research, through the Kwara State University, Malete, Nigeria

References

Antwi-Boasiako, C., & Acheampong, B. B. (2016). Strength properties and calorific values of sawdust-briquettes as wood-residue energy generation source from tropical hardwoods of different densities. *Biomass and Bioenergy*, *85*, 144-152.

Aqa, S., & Bhattacharya, S. C. (1992). Densification of preheated sawdust for energy conservation. *Energy*, *17*(6), 575-578.

Bhattacharya S. C., Leon M. A., & Rahman M. M. (2002). A study on improved biomass briquetting. *Energy for Sustainable Development*, *6*(2), 67-71.

Carnaje, N. P., Talagon, R. B., Peralta, J. P., Shah, K., & Paz-Ferreiro, J. (2018). Development and characterisation of charcoal briquettes from water hyacinth (Eichhornia crassipes)-molasses blend. *PlosOne*, *13*(11).

Chaiklangmuang, S., Supa, S., & Kaewpet, P. (2008). Development of fuel briquettes from biomass-lignite blends. *Chiang Mai Journal of Science*, *35*(1), 43-50.

Demirbas, A. (2004). Combustion characteristics of different biomass fuels. *Progress in Energy and Combustion Science*, *30*(2), 219-230.

Dreizler, R. M., & Lüdde, C. S. (2010). *Theoretical mechanics: Theoretical physics 1*. Berlin, Germany: Springer Science and Business Media.

Eriksson, S., & Prior, M. (1990). *The briquetting of agricultural wastes for fuel* (No. 11). Rome, Italy: Food and Agriculture Organization of the United Nations.

Erlich, C., Öhman, M., Björnbom, E., & Fransson, T. H. (2005). Thermochemical characteristics of sugar cane bagasse pellets. *Fuel*, *84*(5), 569-575.

Fadeyibi, A., Osunde, Z. D., Agidi, G., & Egwim, E. C. (2016). Design of single screw extruder for homogenizing bulk solids. *Agricultural Engineering International: CIGR Journal*, *18*(4).

Fadeyibi, A., Osunde, Z. D., Agidi, G., & Evans, E. C. (2014). Flow and strength properties of cassava and yam starch–glycerol composites essential in the design of handling equipment for granular solids. *Journal of Food Engineering*, *129*, 38-46.

Fitzpatrick, R. (2006). *Classical mechanics*. Morrisville, NC: Lulu Enterprises.

Goyal, H.B., Seal, D., & Saxena, R.C. (2008). Bio-fuels from thermochemical conversion of renewable resources: A review. *Renewable and Sustainable Energy Reviews*, *12*(2), 504-517.

Grover, P.D., & Mishra, S.K. (1996). *Biomass briquetting: Technology and practices* (No. 46). Bangkok, Thailand: Food and Agriculture Organization of the United Nations.

Hiloidhari, M., Das, D., & Baruah, D.C. (2014). Bioenergy potential from crop residue biomass in India. *Renewable and Sustainable Energy Reviews*, *32*, 504-512.

Jamradloedluk, J., & Wiriyaumpaiwong S. (2007). Production and characterization of rice husk based charcoal briquettes. *Engineering and Applied Science Research*, *34*(4), 391-398.

Kalyan, N., & Morey, R. V. (2009). Factors affecting strength and durability of desified biomass product. *Biomass and Bioenergy*, *33*, 337-359.

Kargbo, F. R., Xing, J., & Zhang, Y. (2010). Property analysis and pretreatment of rice straw for energy use in grain drying: A review. *Agriculture and Biology Journal of North America*, *1*(3), 195-200.

Khurmi, R. S., & Gupta, J. K. (2005). *A textbook of machine design (S.I. Units)*. Kolkata, India: Eurasia Publishing House.

Mani, S., Tabil, L. G., & Sokhansanj, S. (2006). Specific energy requirement for compacting corn stover. *Bioresource Technology*, *97*(12), 1420-1426.

Nordiana, J. O. (2009). Development and performance evaluation of an electrically operated biomass briquetting machine. *International Journal of Natural and Applied Sciences*, *5*(2), 120-124.

Obi, O. F., Akubuo, C. O., & Okonkwo, W. I. (2013). Development of an appropriate briquetting machine for use in rural communities. *International Journal of Engineering and Advanced Technology*, *2*(4), 78-582.

Olorunnisola, A.O. (2004). Briquetting of rattan furniture waste. *Journal of Bamboo and Rattan*, *3*(2), 139-149

Orhorhoro, E. K., Okonkwo, M. C., Oghoghorie, O., & Onogbotsere, M. E. (2017). Design and fabrication of an improved low cost biomass briquetting machine suitable for use in Nigeria. *International Journal of Engineering Technology and Science, 8*(1), 1-10.

Paré, D., Bernier, P., Thiffault, E., & Titus, B.D. (2011). The potential of forest biomass as an energy supply for Canada. *The Forestry Chronicle, 87*(1), 71-76.

Plíštil, D., Brožek, M., Malaták, J., Roy, A., & Hutla, P. (2005). Mechanical characteristics of standard fuel briquettes on biomass basis. *Research in Agricultural engineering, 51*(2), 66-72.

Teixeira, S. R., Pena, A. F. V., & Miguel, A. G. (2010). Briquetting of charcoal from sugar-cane bagasse fly ash (scbfa) as an alternative fuel. *Waste Management, 30*(5), 804-807.

Vasilenko, P. M. (1996). *Introduction to agricultural mechanics*. Kiev, Ukraine: Agricultural Education.

Wu, S., Zhang, S., Wang, C., Mu, C., & Huang, X. (2018). High-strength charcoal briquette preparation from hydrothermal pretreated biomass wastes. *Fuel Processing Technology, 171*, 293-300.

Yisa, M. G., Fadeyibi, A., & Salman A**. (**2018). Design, fabrication and testing of a locust bean cubing machine. *Asian Journal of Applied Sciences, 11* (2): 56-63.

Appendix

Abbreviations:

Symbol	Meaning	SI Unit
b	base of the triangle	mm
h	height	mm
l	width of the rectangle	mm
H	height between trapezium ends	mm
V	volume of the hoper	mm^3
θ	helix angle	deg
S	pitch of the screw	mm
D	screw diameter	mm
L	briquette screw length	mm
n	number of wounds of screw flight	
L_x	belt length	mm
D_1	driving pulley diameter	mm
D_2	driven pulley diameter	mm
C	centre to centre distance	mm
F	briquetting force	N
β	thread efficiency	%
ε	belt drive efficiency	%
n	frictional loss efficiency	%
v	velocity of the worm	m/s
P	total power requirement	Watts
C_t	throughput capacity	kg/s
m_b	mass of briquette produced at time t	kg
ϕ	Machine efficiency	%
W_b	mass of sample feed into the machine	kg
W_f	mass of briquette produced	kg

View publication stats