JOURNAL OF ENGINEERING RESEARCH AND REVIEWS
2025; 2(1): 1-11.
10.5455/JERR.20241007042800

ORIGINAL RESEARCH

Open Access

AI-driven demand forecasting for enhanced energy management in renewable microgrids: A hybrid lstm-cnn approach

Bashiru Olalekan Ariyo[1], Lambe Mutalub Adesina[2], Olalekan Ogunbiyi[2], Abdulwaheed Musa[2,3], Bilkisu Jimada Ojuolape[2], Monsurat Omolara Balogun[2]

[1]Department of Electrical and Electronics Engineering, Faculty of Engineering and Technology, University of Ilorin, Nigeria

[2]Department of Electrical and Computer Engineering, Faculty of Engineering and Technology, Kwara State University, Malete, Nigeria

[3]Institute for Intelligent Systems University of Johannesburg, South Africa

ABSTRACT

The increasing integration of renewable energy sources into microgrids (MGs) underscores the need for accurate demand forecasting to ensure stable and efficient MG operation. However, the inherent unpredictability of renewable energy sources presents significant challenges in energy management. This study aims to develop and validate an AI-driven demand forecasting model that improves prediction accuracy compared to traditional methods, thereby enhancing energy management in renewable MGs. A hybrid forecasting model that combines long short-term memory (LSTM) networks and convolutional neural networks (CNNs) was proposed. The model leverages historical energy consumption and meteorological data for training, ensuring robust and accurate predictions. Data preprocessing, training, and validation were performed meticulously to evaluate performance. The proposed model was compared with traditional forecasting techniques, including ARIMA and Exponential Smoothing, to assess its accuracy. The hybrid LSTM-CNN model demonstrated superior performance, achieving an R2 value of 0.87, a mean absolute error of 1.45 MWh, and a root mean squared error of 2.12 MWh. These results significantly outperform conventional forecasting methods, such as ARIMA and exponential smoothing, highlighting the model's enhanced accuracy and ability to address key challenges in renewable energy forecasting. This study establishes the effectiveness of the hybrid LSTM-CNN approach in terms of improving the demand forecasting of renewable MGs. The model's superior accuracy provides a reliable tool for real-time decision-making, energy distribution optimization, and cost reduction. Policymakers and energy stakeholders can use these insights to develop sustainable energy systems, with future research focusing on scaling up the model and exploring behavior and market pricing to improve forecasting precision.

ARTICLE HISTORY

Received October 07, 2024
Accepted December 10, 2024
Published December 29, 2024

KEYWORDS

AI-driven demand forecasting; long short-term memory (LSTM) networks; renewable microgrids; energy management; convolutional neural networks (CNNs); forecasting accuracy

Introduction

Background and context

Energy management plays a crucial role in optimizing the efficiency and dependability of distributed energy systems. Renewable microgrids (MGs), which incorporate renewable energy sources such as solar, wind, and hydropower, provide sustainable energy options, especially in isolated regions.

Effective energy management ensures optimal use of these resources, waste reduction, and improved system performance. Balancing the supply and demand in MGs enhances energy security and reduces fossil fuel dependency, contributing to environmental sustainability [1–4]. Because renewable energy sources are unpredictable and sporadic, projecting demand for them poses particular difficulties [5–7]. Unlike traditional energy sources, renewable energy output fluctuates according to

Contact Bashiru Olalekan Ariyo ariy@unilorin.edu.ng Department of Electrical and Electronics Engineering, Faculty of Engineering and Technology, University of Ilorin, Nigeria.

© The Author(s) 2025. Open Access. This article is licensed under a Creative Commons Attribution 4.0 International License (CC BY). http://creativecommons.org/licenses/by/4.0/.

weather conditions, time of day, and season [8]. This fluctuation makes it more difficult to estimate energy supply and demand accurately, which could lead to MG instability. Conventional forecasting techniques, which frequently rely on statistical models and historical data, find it difficult to take these swings into account, leading to less accurate predictions and inefficient energy management [9–11].

The role of AI in enhancing demand forecasting accuracy

In renewable MGs, artificial intelligence (AI) improves the accuracy of demand forecasts. AI techniques, such as machine learning and neural networks, can examine big datasets and spot intricate connections that conventional approaches might overlook [12–14]. AI models can adjust to changing situations and produce forecasts that are more precise and timelier by learning from past data as well as real-time inputs. A more stable and effective MG operation is ensured by this increased accuracy, which makes it possible to plan and manage energy supplies more effectively [15–17]. AI-powered demand forecasting may also consider outside variables like market trends and weather predictions, which improves its predictive power [18,19].

Accurate demand forecasting is crucial for maintaining the stability and efficiency of renewable MGs. Precise predictions allow MG operators to optimize energy resource use while minimizing waste and reducing operational costs [20]. Accurate forecasts enable better scheduling of energy storage and generation activities, ensuring that the supply meets the demand even during low renewable energy output periods. This leads to improved reliability and resilience of the MGs, reducing the risk of blackouts and enhancing overall system performance [21–23].

Impact of renewable energy adoption and sustainability

Improving demand forecasting accuracy through AI significantly impacts renewable energy adoption and sustainability. Demonstrating reliable and efficient renewable MGs will increase confidence in these systems and encourage wider adoption. This helps mitigate climate change by lowering greenhouse gas emissions and promoting a switch to a sustainable energy landscape [24]. Additionally, efficient energy management in renewable MGs can lower costs and make renewable energy more competitive with traditional sources, further promoting its adoption [25].

Applying conventional forecasting techniques to renewable energy sources has several drawbacks. These techniques frequently depend on historical data and basic statistical models, which may not adequately represent the complexity and fluctuations of renewable energy production. As a result, traditional forecasts can be inaccurate, leading to suboptimal energy management decisions [26]. Furthermore, these methods cannot typically adapt to real-time changes and incorporate external factors, limiting their effectiveness in dynamic environments like renewable MGs [27].

Innovative AI-driven strategies are required to overcome the shortcomings of conventional forecasting techniques; AI models use sophisticated algorithms and big datasets to produce forecasts that are more flexible and accurate [28]. AI-driven methods provide a more thorough picture of energy supply and demand by combining real-time data with outside variables like market movements and meteorological conditions. This improves the efficiency and dependability of renewable MGs by enabling more proactive and effective energy management [29,30].

The main objective of this research is to develop and evaluate an AI-based model for renewable MG demand forecasting. This study aims to demonstrate how AI can improve the accuracy of demand forecasts and enhance energy management practices. The objectives are as follows:

1. To develop a robust AI-driven demand forecasting model that can be tailored to the unique characteristics of renewable MGs.
2. To compare the accuracy and dependability of the model's performance to that of conventional forecasting techniques.
3. To analyze the impact of AI-driven demand forecasting on the stability and efficiency of renewable MGs.
4. To provide helpful advice and suggestions for applying AI-based demand forecasting to actual MG situations.

The remainder of this paper is structured as follows: Theoretical Analysis, Materials and Methods, Results and Discussion, and conclusions.

Fundamentals of demand forecasting

Demand forecasting is the practice of estimating future energy use by considering past performance, present patterns, and additional influencing variables [30]. It is an essential component of energy

management, especially in renewable MGs where dependability and efficiency depend on the careful maintenance of the supply-demand balance.

Accurate demand forecasting enables better resource allocation, optimal operation of generation and storage units, and reduction of energy wastage [31,32]. Consequently, this results in reduced expenses and improved energy system reliability [33,34].

Time series analysis, regression models, and probabilistic forecasting are key concepts in demand forecasting. The mean absolute error (MAE), mean squared error (MSE), and root mean squared error (RMSE) are three metrics frequently used to assess forecasting accuracy. By evaluating the discrepancy between the anticipated and actual energy usage, these measures help improve the forecasting models [35].

Structure and components of renewable microgrid systems

Renewable MGs are localized small-scale energy systems that integrate energy sources, such as wind turbines, solar panels, fuel cells, and battery storage systems [36–40], as presented in Figure 1.

These energy sources can work with the main grid or independently [41], wind turbines generate electricity from wind energy, and photovoltaic cells generate sunlight. Fuel cells provide continuous electricity through chemical reactions and act as reliable backup sources. The battery system stores excess energy from the PV cells and wind turbines, ensuring a stable power supply during fluctuations. The DC bus bar directly distributes the direct current power to the DC loads, which consume DC electricity directly. A dump load safeguards the system by absorbing surplus energy that cannot be stored or used, thus preventing overvoltage. Inverters convert DC electricity into alternating current (AC) for AC loads and grid connections. Power management systems monitor and optimize component operations to ensure efficient energy conversion, load balancing, and system stability [42].

MGs powered by renewable energy face certain challenges that are not usually present in conventional systems. These include the requirement for advanced energy storage technologies, the erratic and intermittent nature of renewable energy sources, and the integration of various generating units [43,44]. Additionally, renewable MGs often operate in isolated or remote areas, which increases the complexity of their design and operation. Efficient demand forecasting is particularly challenging in this context because of the dynamics of renewable energy sources and the lack of extensive historical data [45].

AI techniques for demand forecasting: an overview of AI methods

AI techniques have revolutionized demand forecasting by providing advanced methods capable of handling complex and nonlinear relationships in data. Common AI methods include machine learning algorithms [46] (e.g., support vector machines, decision trees), neural networks [47] (e.g., feedforward, recurrent), and deep learning models (e.g., convolutional neural networks, and long short-term memory networks). These methods excel at pattern recognition and can process large volumes of data to make accurate predictions.

The comparison of AI tools to conventional statistical methods revealed various advantages. They are incredibly strong and versatile because they can recognize and adjust to new patterns in data. Energy consumption patterns frequently involve nonlinearities and variable interactions, which

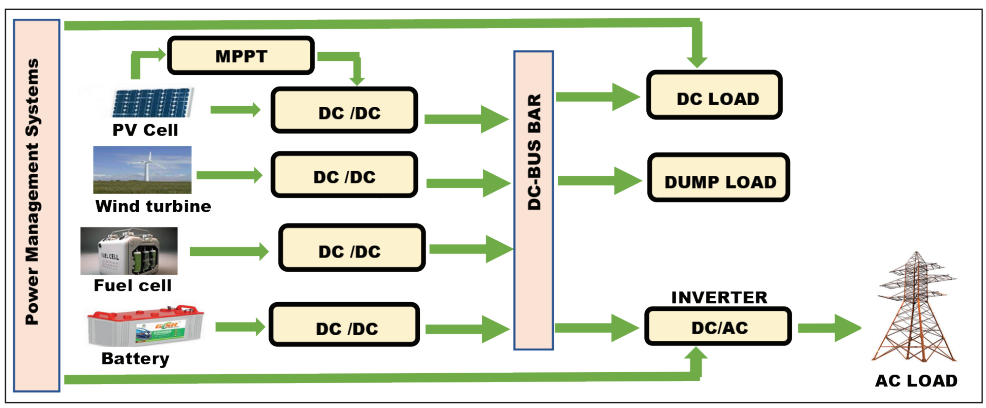

Figure 1. Schematic diagram of a renewable MG system.

AI models can handle [48]. Additionally, AI can improve prediction accuracy by incorporating real-time data and external elements like market trends and weather. As a result, forecasts become more accurate and reliable, which is crucial for the successful operation of renewable MGs [49].

AI-driven demand forecasting has demonstrated notable gains in accuracy and reliability compared to traditional methods. Studies have shown that machine learning models, such as decision trees and support vector machines, outperform conventional statistical models in predicting energy demand [50]. Deep learning models and Neural networks have also been extensively studied, with results indicating their superior performance in handling complex and high-dimensional data [51]. In addition, hybrid models that combine different AI techniques have been explored, offering even greater accuracy and robustness [52].

Even with AI's contribution to demand forecasting, there are still several unanswered questions and areas that require further investigation. Integrating real-time data and dynamically adapting models to shifting circumstances is one important topic. Studies on adaptable models, which can continuously learn and update based on new data, are needed even if most of the current studies have concentrated on static models.

Furthermore, there is still more to learn about the influence of outside variables, such as consumer behavior and economic indicators, on demand forecasting in renewable MGs [53,54]. In addition, research into the application and scalability of AI-based forecasting models in real-world MG systems scenarios is required to address the practical difficulties and limitations. This work covers these aspects and other areas that are not mentioned.

Materials and Methods

Data collection

The development of an AI-based demand forecasting model for renewable MGs requires diverse datasets [55]. The primary data sources were historical energy consumption and weather data. The historical energy consumption data is obtained from the MG operational records, encompassing variables such as hourly or daily energy usage across different periods. These data are essential for understanding past demand patterns and seasonal variations. Weather data, including temperature, humidity, and solar radiation, are sourced from local meteorological stations or weather services [56]. This information is crucial because weather conditions significantly influence the output of renewable energy sources such as solar and wind [57].

This section outlines the methodology used to develop and implement an AI-driven demand forecasting model for renewable MGs. The model utilizes a hybrid long short-term memory (LSTM) network and convolutional neural network (CNN) to improve the forecasting accuracy of energy demand in MGs powered by renewable energy sources. The proposed methodology is divided into four main sub-sections: Dataset Description, Data Preprocessing, Model Architecture, and Model Training and Validation.

Dataset description

The renewable resource data used in this study pertain to the Kaba-Owode community of the Ifelodun Local Government Area, Kwara State, Nigeria. The community is located at a latitude of 8° 23′ N and longitude of 4° 36′ E and comprises 85 buildings. The electrical load consumption data for the site were obtained from the Power Holding Company of Nigeria, Challenge Business Hub, Ilorin, Kwara State, Nigeria.

Figure 2 illustrates the average monthly energy consumption pattern (in kWh) over 12 months. The graph shows that the site experienced peak load demands of 7.5 kWh in July. This increase may reflect a seasonal pattern and is likely caused by higher energy demands during warmer months, prompting increased use of cooling systems such as fans and air conditioners. After July, energy consumption begins to decline, dropping to approximately 5.8 kWh by December. This trend may indicate reduced energy demands during cooler months or a decrease in activity due to holiday-related factors.

Meteorological data were obtained from the Surface Meteorology and Solar Energy database hosted on the National Aeronautics and Space Administration (NASA) website, NASA. Internet: (http://eosweb.larc.nasa.gov) 10th February 2023. These data include the following:

- Temperature (°C): Average monthly temperature, which influences both energy consumption and renewable energy generation.
- Humidity (%): Affects solar panel efficiency and energy consumption.
- Wind Speed (m/s): Impact on wind turbine energy production.

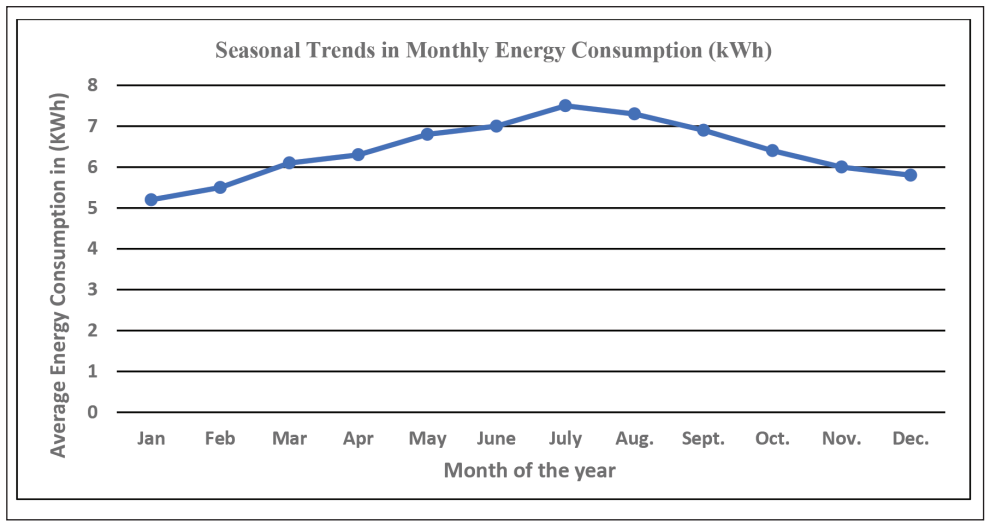

Figure 2. Seasonal variation in energy consumption at Kaba-Owode (kWh).

Table 1. Monthly Av. Dataset for Kaba-Owode Community, Kwara, Japan.

Month	Av. Energy consumption (MWh)	Average temp. (°C)	Average humidity (%)	Average wind speed (m/s)	Av. Solar radiat. (kW/m²)
Jan	5.2	28.1	72	3.4	4.5
Feb	5.5	29.3	69	3.1	4.7
Mar	6.1	30.2	68	3.3	5.0
Apr	6.3	30.5	65	3.2	5.3
May	6.8	31.0	63	3.0	5.5
June	7.0	30.8	60	3.5	5.8
July	7.5	30.2	58	3.6	6.0
Aug.	7.3	29.7	59	3.4	5.9
Sept.	6.9	28.5	62	3.2	5.4
Oct.	6.4	28.2	65	3.1	5.2
Nov.	6.0	27.8	68	2.9	5.1
Dec.	5.8	27.4	70	2.9	4.9

- Solar Radiation (kW/m^2): Affects solar panel output.

Table 1 presents the comprehensive dataset used in this study, with monthly averages for each variable:

Data preprocessing

Data preprocessing ensured the quality and usability of the dataset for model development [57]. The following steps were taken:

1. Data cleaning: Missing or incorrect values were imputed using interpolation, and outliers were addressed as necessary [58].
2. Normalization: Data normalization was performed to standardize the range of variables, ensuring that all features contributed equally to the model's learning process.
3. Feature engineering: Temporal features like day of the week, holidays, and time of day were created to capture energy consumption patterns.
4. Data splitting: The dataset was split into training (70%), validation (15%), and testing (15%) sets for model development and evaluation.

Model architecture

The proposed hybrid model combines two distinct machine-learning architectures:

- LSTM component: LSTM networks, which are a type of recurrent neural network (RNN), are ideal for capturing temporal dependencies in sequential data [59]. The LSTM component in this model learns patterns in past energy usage

and meteorological data to forecast future demand [60].

- Convolutional neural networks (CNNs): CNNs are typically used for image recognition but are effective at identifying spatial correlations in data [61]. In this study, the CNN component extracts spatial dependencies between features like temperature, humidity, and solar radiation to enhance the forecasting model.

By combining the LSTM and CNN architectures, the model efficiently handles both temporal and spatial features to predict the energy demand of renewable MGs.

Model training and validation

The data were split into training, validation, and testing sets. The following steps were followed:

1. Preprocessing: The dataset was normalized before being fed into the model to improve convergence.
2. Model training: The hybrid model was trained for 100 epochs with an Adam optimizer and a batch size of 64 for efficient learning.
3. Evaluation metrics: Performance was evaluated using the following equations:

- Mean absolute error: This statistic calculates the average magnitude of prediction errors without considering direction. This gives a clear indicator of the accuracy of the projection is [62].
- Root mean squared error: The RMSE helps analyze the model's performance in situations where significant deviations are especially undesired [63,64]. The RMSE assesses how well the model handles large deviations and assigns a higher weight to larger errors.
- R-squared (R^2): This metric represents the proportion of variance in the dependent variable that can be explained by the independent variables, providing insight into the model's explanatory capability [65], and overall predictive power.

The model achieved an R^2 value of 0.87, indicating that it explained 87% of the variance in the energy consumption predictions and an MAE of 1.45 MWh, demonstrating high prediction accuracy.

Model deployment and real-time integration

Once trained, the AI model was deployed to the MG control system or cloud infrastructure to enable real-time forecasting. It was connected to data sources, such as energy consumption meters and weather stations, for continuous updates and adjustments to forecasts. Integration into the MG management system allows for better decision-making regarding energy distribution, storage, and grid stability. Continuous monitoring and regular retraining ensure the model's accuracy and adaptability to changing conditions.

Results

The AI-based demand forecasting model was assessed using key indicators, such as MAE, RMSE, and R-squared (R^2) to evaluate its predictive accuracy. The model achieved an MAE of 1.45 MWh, an RMSE of 2.12 MWh, and an R^2 value of 0.87, demonstrating high predictive accuracy in energy consumption forecasting [66]. These results indicate the model's ability to identify underlying data patterns and generate accurate forecasts.

In comparison with traditional methods, such as exponential smoothing and ARIMA, the AI model demonstrated superior performance. Exponential smoothing produced an MAE of 2.35 MWh and an RMSE of 3.05 MWh, while ARIMA's MAE and RMSE values were 2.10 MWh and 2.75 MWh, respectively. These findings highlight the hybrid model's ability to manage the complexities of renewable energy sources, which require handling both temporal and spatial variability, which is closely aligned with the findings reported by [67]. Additionally, the model's ability to incorporate real-time data and adjust to shifting circumstances contributes to its improved accuracy.

The forecasting precision of AI models is especially critical for renewable MGs, where energy demand fluctuations are influenced by complex interactions among weather conditions, time-of-day variations, and historical demand patterns. By accounting for these factors, the model enables more accurate predictions, optimizing energy distribution and storage, and thus enhancing MG performance. These results closely match those reported by [68], where similar methodologies were employed, thus reinforcing the robustness of the current findings. Furthermore, the hybrid LSTM-CNN approach offers a comprehensive view of demand forecasting by capturing both temporal and spatial data, thus addressing issues that are often overlooked by traditional models.

Discussion

Comparative analysis of AI-based models compared with traditional techniques

Previous studies have focused on time-series models like ARIMA or single LSTM networks, which capture either temporal or spatial dependencies, but not both. These models struggle with the dynamic nature of renewable energy generation, which is influenced by both time-dependent variations (e.g., weather patterns, daily/seasonal cycles) and spatial factors (e.g., regional demand variations). Moreover, many studies have not incorporated critical external factors, such as weather, that significantly impact forecasting accuracy in MG systems.

In contrast, the hybrid LSTM-CNN model integrates temporal (energy consumption over time) and spatial data (regional demand variations), providing a more robust and accurate forecast. The model outperformed ARIMA, Exponential Smoothing, and other AI-based models like individual LSTM networks and support vector machines in terms of MAE, RMSE, and R^2. Specifically, the hybrid model achieved an R^2 of 0.87 and MAE of 1.45 MWh, compared to R^2 values of 0.74 and MAE of 2.35 MWh for ARIMA, and R^2 of 0.77 and MAE of 2.12 MWh for Exponential Smoothing. These results underscore the hybrid model's superior performance in forecasting the variability in demand for renewable MGs.

Research contribution and novelty

This study makes a significant contribution by introducing a hybrid forecasting model that integrates LSTM networks and convolutional neural networks (CNNs). LSTM excels at capturing temporal dependencies in energy consumption data, whereas CNNs identify spatial patterns related to regional demand variations. The synergy between these models addresses the multifaceted nature of renewable MG demand, which previous models using only one of these approaches could not fully capture. The combined LSTM-CNN architecture is particularly suitable for renewable MGs, where both time-based and spatial factors influence power generation and demand, offering a more accurate and comprehensive forecasting solution.

The novelty of this study lies in the integrative use of LSTM and CNN models to address forecasting challenges by incorporating both temporal and spatial aspects of energy demand. Previous studies typically employed either LSTM or CNN independently; however, the hybrid model presented in this paper offers a novel solution by effectively integrating these two approaches. In addition, the inclusion of meteorological data alongside energy consumption patterns significantly improves forecasting accuracy, making this model suitable for real-time energy management in renewable MGs.

Challenges and limitations

Several challenges arose during the study, primarily related to the quality and granularity of historical energy consumption and weather data. Missing or inconsistent data can reduce forecast reliability. Moreover, as noted by [69], deep learning models require significant computational resources for training and validation, which can limit scalability. To address these challenges, future research should focus on improving data quality and incorporating more granular data through advanced data-cleaning techniques. In addition, enhancing computational efficiency through optimization algorithms and leveraging cloud-based platforms for scalable processing can mitigate resource constraints. Investigating the integration of external factors such as economic indicators and behavioral patterns may further improve the model's predictive capabilities and applicability across different MG scenarios [70].

The results of this study are consistent with the recent research, which showed that AI-driven methods outperform traditional forecasting techniques in terms of accuracy and flexibility. Previous studies, such as those by [71] and [72] have emphasized the effectiveness of LSTM networks in capturing the temporal dependencies in energy forecasting. However, this study's innovative use of CNNs for feature extraction differentiates it from conventional approaches, offering a novel direction for future research in the energy sector.

Conclusion

This study significantly advances the development of AI-driven demand forecasting models for renewable MGs by demonstrating that the hybrid LSTM-CNN approach offers higher accuracy than traditional forecasting models. The model achieved an R-squared value of 0.87 and an MAE of 1.45 MWh, outperforming conventional methods such as ARIMA and Exponential Smoothing. By combining LSTM's ability to handle temporal dependencies with CNN's strength in recognizing spatial correlations, the proposed model addresses critical

challenges in renewable energy forecasting that were previously overlooked. These findings provide valuable insights for policymakers, offering a more accurate tool for real-time decision making, energy distribution optimization, and operational cost minimization in renewable MGs.

Governments can use these insights to formulate policies that promote a stable and sustainable energy supply. Energy forecast policymakers should adopt these advanced AI techniques to improve prediction accuracy, enabling more informed and effective decisions. For the energy industry, implementing AI models promises to revolutionize operations by reducing energy waste, improving energy utilization, and cutting operational costs.

Implications for energy policymakers and industry

The findings offer substantial implications for policymakers and the energy industry. Policymakers can leverage these insights to design and implement policies that support the transition to more sustainable and reliable energy systems. The enhanced forecasting capabilities provided by the AI-driven model can facilitate better management of renewable MGs, ensuring consistent energy supply while reducing operational inefficiencies. For the energy industry, adopting these AI models can lead to significant cost savings by optimizing energy distribution and reducing wastage, which is essential for managing the increasing demand for renewable energy.

Future research directions

Future research should focus on scaling the hybrid LSTM-CNN model to larger and more complex MG systems. Investigating reinforcement learning techniques could further enhance the sophistication and adaptability of the model for dynamic forecasting in changing energy environments. Additionally, integrating behavioral and economic factors—such as user behavior patterns and market pricing—could refine prediction accuracy and improve the model's applicability across various energy markets.

Addressing limitations such as poor data quality and computational constraints is crucial for further improving the model's performance. Future work should explore the integration of more detailed information and external factors, including economic indicators and user behavior, to enhance the forecasting process. This research advocates for ongoing innovation in AI technologies, focusing on their transformative potential in energy management and sustainable energy practices. By integrating AI, the energy sector can move toward a more reliable, adaptable, and sustainable future.

References

1. Cagnano A, De Tuglie E, Mancarella P. Microgrids: overview and guidelines for practical implementations and operation. Appl Energy 2005; 258:258–61.
2. Ogwuche G, Boniface O, Idoko E. Investigation of energy audit of the administrative complex of Benue state polytechnic, Ugbokolo. World J Adv Res Rev 2022; 16(1):449–556.
3. Androniceanu A, Sabie OM. Overview of green energy as a real strategic option for sustainable development. Energies 2022; 15(22):1–35.
4. Bolón-Canedo V, Morán-Fernández L, Cancela B, Alonso-Betanzos A. A review of green artificial intelligence: Towards a more sustainable future. Neurocomputing 2024;599:1–10. Available from: https://doi.org/10.1016/j.neucom.2024.128096
5. Conteh F, Takahashi H, Hemeida AM, Krishnan N, Mikhaylov A, Senjyu T. Analysis of hybrid grid-connected renewable power generation for sustainable electricity supply in Sierra Leone. Sustain 2021; 13(20):1–20.
6. Rebollal D, Carpintero-Rentería M, Santos-Martín D, Chinchilla M. Microgrid and distributed energy resources standards and guidelines review: Grid connection and operation technical requirements. Energies 2021; 14(3):1–24.
7. Ahmed SD, Al-Ismail FSM, Shafiullah M, Al-Sulaiman FA, El-Amin, I.M. Grid integration challenges of wind energy: a review. IEEE Access, pp 1–23, 2020.
8. Tayyebi A, Grob D, Anta A, Kupzog F, Dorfler F. Frequency stability of synchronous machines and grid-forming power converters. IEEE J Emerg Sel Top Power Electron 2020; 8(2):1–15.
9. Espín-Sarzosa D, Palma-Behnke R, Cañizares CA, Annakkage U, Elizondo M, Du W, Meegahapola L, Mendoza- Araya PA, Nasr E, Ramos R, Ropp MC, Simpson-Porco JW, Reilly JT. Microgrid model for stability analysis. EEE Transctions Smart Grid, pp 1–18, 2023.
10. Morstyn T, Hredzak B, Agelidis VG. Control strategies for microgrids with distributed energy storage systems: an overview. IEEE Trans Smart Grid 2018;9(4):1–15.
11. Azlan F, Kurnia JC, Tan BT, Ismadi MZ. Review of optimization methods for wind farm arrays under three classical wind condition problems. Renew Sustain Energy Rev [internet] 2021; 135:1–17. Available via https://doi.org/10.1016/j.rser.2020.110047
12. Sun S, Wang Y, Wang H, Meng Y, Liu S. Two-level optimal scheduling strategy of demand response-based microgrids based on renewable energy forecasting. 2023; Available via https://www.researchsquare.

com/article/rs-3074985/latest%0Ahttps://www.researchsquare.com/article/rs-3074985/latest.pdf
13. Muhammad A, Ishaq AA, B IO, Idris MB. Artificial intelligence and machine learning for real-time energy demand response and load management. J Technol Innov Energy 2023; 2(2):20–9.
14. Chen Y, Bhutta MS, Abubakar M, Xiao D, Almasoudi FM, Naeem H et al. Evaluation of machine learning models for smart grid parameters: performance analysis of ARIMA and Bi-LSTM. Sustain 2023; 15(11):1–25.
15. Xiong B, Guo Y, Zhang L, Li J, Liu X, Cheng L. Optimizing electricity demand scheduling in microgrids using deep reinforcement learning for cost-efficiency. IET Gener Transm Distrib 2023; 17(11):2535–44.
16. Miah MSU, Sulaiman J, Islam MI, Masuduzzaman M. Predicting short-term energy demand in smart grid: a deep learning approach for integrating renewable energy sources in line with SDGs 7, 9, and 13. IEEE Access 2023; 4:1–16. Available via http://arxiv.org/abs/2304.03997
17. Arumugham V, Ghanimi HMA, Pustokhin DA, Pustokhina I V, Ponnam VS, Alharbi M et al. An artificial-intelligence-based renewable energy prediction program for demand-side management in smart grids. Sustain 2023; 15(6):1–26.
18. Yoon D. Methodology for improving the performance of demand forecasting through machine learning. 2023; Available via https://typeset.io/papers/methodology-for-improving-the-performance-of-demand-1gfz03pe
19. Sharma M, Gupta AK. A comprehensive review of artificial intelligence applications in the fight against COVID19. ACM International Conference Proceeding Ser, Jaipur, India. 2023.
20. Biswas P, Rashid A, Biswas A, Al Nasim MA, Gupta KD, George R. AI-Driven approaches for optimizing power consumption: a comprehensive survey. 2024;1–32. Available via http://arxiv.org/abs/2406.15732
21. Ahmad T, Zhang D, Huang C, Zhang H, Dai N, Song Y et al. Artificial intelligence in sthe sustainableenergy industry: Status Quo, challenges, and opportunities. J Clean Prod 2021; 289:125834.
22. Deshpande V. Smart Grids Integration with AI-Powered Demand Response. RJCSE 2024; 5(1):45–58.
23. Stecuła K, Wolniak R, Grebski WW. AI-Driven urban energy solutions—from individuals to society: a review. Energies 2023; 16(24):1–34.
24. Zohuri B. Citation: Bahman Zohuri. Navigating the global energy landscape balancing growth, demand, and sustainability. J Mater Sci Apl Eng [internet] 2023; 2(4):1–07. Available via www.mkscienceset.com
25. Sami MS, Abrar M, Akram R, Hussain MM, Nazir MH, Khan MS, et al. Energy management of microgrids for smart cities: a review. Energies 2021; 14(18):1–18.
26. Rajagukguk RA, Ramadhan RAA, Lee HJ. A review of deep learning models for forecasting time series data of solar irradiance and photovoltaic power. Energies 2020; 13(24):6623.
27. Antonopoulos I, Robu V, Couraud B, Kirli D, Norbu S, Kiprakis A et al. Artificial intelligence and machine learning approaches to energy demand response: a systematic review. Renew Sustain Energy Rev [internet] 2020; 130(April):109899. https://doi.org/10.1016/j.rser.2020.109899
28. Slater LJ, Arnal L, Boucher MA, Chang AYY, Molds S, Murphy C et al. Hybrid forecasting: blending climate predictions with AI models. Hydrol Earth Syst Sci 2023; 27(9):1865–89.
29. Zahraoui Y, Korõtko T, Rosin A, Mekhilef S, Seyedmahmoudian M, Stojcevski A, et al AI Applications to enhance resilience in power systems and ,icrogrids—a review. Sustainability 2024; 16(12):4959.
30. Klyuev RV, Morgoev ID, Morgoeva AD, Gavrina OA, Martyushev NV, Efremenkov E A, et al. Methods of forecasting electric energy consumption: a literature review. Energies 2022; 15(23):8919.
31. Maarif MR, Saleh AR, Habibi M, Fitriyani NL, Syafrudin M. Energy usage forecasting model based on long short-term memory (LSTM) and eXplainable artificial intelligence (XAI). Information 2023; 14(5):265.
32. Mystakidis A, Ntozi E, Afentoulis K, Koukaras P, Gkaidatzis P, Ioannidis D et al. Energy generation forecasting: elevating performance with machine and deep learning. Computing [internet] 2023; 105(8):1623–45. https://doi.org/10.1007/s00607-023-01164-y
33. Taha A, Barakat B, Taha MMA, Shawky MA, Lai CS, Hussain S et al. A comparative study of single- and multi-stage forecasting algorithms for predicting electricity consumption using the UK National Health Service (NHS) Hospital Dataset. Futur Internet 2023; 15(4):134.
34. Islam BU, Ahmed SF. Short-term electrical load demand forecasting based on LSTM and RNN deep neural networks. Math Probl Eng 2022; (12):1–102022.
35. Sharma V, Sharma V. A comprehensive exploration of regression techniques for building energy prediction a comprehensive exploration of regression techniques for building energy prediction. Eur J Adv Eng Technol. 2021;8(10): 83–7.
36. Prinsloo G, Dobson R, Mammoli A. Synthesis of an intelligent rural village microgrid control strategy based onsmarterd multiagent modeling and transactive energy management principles. Energy

[internet] 2018; 147:1–40. Available via https://doi.org/10.1016/j.energy.2018.01.056
37. Rajendran Pillai VR, Rajasekharan Nair Valsala R, Raj V, Petra MI, Krishnan Nair SK, Mathew S. Exploring the potential of microgrids in the effective utilization of renewable energy: a comprehensive analysis of evolving themes and future priorities using main path analysis. Designs 2023; 7(3):1–31.
38. Hoummadi MA, Bouderbala M, Alami Aroussi H, Bossoufi B, El Ouanjli N, Karim M. Survey of sustainable energy sources for microgrid energy management: a review. Energies 2023; 16(7):1–16.
39. Afifi MA, Marei MI, Mohamad AMI. Modeling, analysis and performance of a low Inertia AC-DC Microgrid. Appl Sci 2023; 13(5):1–19.
40. Abdallah WJ, Hashmi K, Faiz MT, Flah A, Channumsin S, Mohamed MA, et al. A novel control method for active power sharing in renewable energy-based micro distribution networks. Sustain 2023; 15(2):1–24.
41. Shafiullah M, Refat AM, Haque ME, Chowdhury DMH, Hossain MS, Alharbi AG, et al. Review of recent developments in microgrid energy management strategies. Sustainability 2022; 14:1–30.
42. Tomin N, Shakirov V, Kozlov A, Sidorov D, Kurbatsky V, Rehtanz C, et al. Design and optimal energy management of community microgrids using flexible renewable energy sources. Renew Energy 2022 Jan 1; 183:903–21.
43. Sharma V, Garg P, Sharma A, Bharti North A comprehensive review: mitigating techniques for power variability due to the integration of renewable energy sources with grid. J Electron Electr Eng 2023; 2:152–63.
44. Shahzad S, Abbasi MA, Ali H, Iqbal M, Munir R, Kilic H. Possibilities, challenges, and future opportunities of microgrids: a review. Sustain 2023; 15(8):6366.
45. Russo MA, Carvalho D, Martins N, Monteiro A. Forecasting the inevitable: a review of the impacts of climate change on renewable energy resources. Sustain Energy Technol Assessments [internet] 2022; 52(PC):102283. Available via https://doi.org/10.1016/j.seta.2022.102283
46. Wu Z, Luo G, Yang Z, Guo Y, Li K, Xue Y. A comprehensive review of deep learning approaches in wind forecasting applications. CAAI Trans Intell Technol 2022; 7(2):129–43.
47. Rahman MM, Shakeri M, Tiong SK, Khatun F, Amin N, Pasupuleti J et al. Prospective methodologies for hybrid renewable energy systems for energy prediction using artificial neural networks. Sustain 2021; 13(4):1–28.
48. Hora SK, Poongodan R, de Prado RP, Wozniak M, Divakarachari PB. Long short-term memory network-based metaheuristic for effective electric energy consumption prediction. Appl Sci 2021; 11(23):11263.
49. Rashidi R, Hatami A, Abedini M. Multimicrogrid energy management through tertiary-level control: structure and case study. Sustain Energy Technol Assessments [internet] 2021;47(June):101395. Available via https://doi.org/10.1016/j.seta.2021.101395
50. Chen Y, Guo M, Chen Z, Chen Z, Ji Y. Physical energy and data-driven models for building energy prediction: a review. Energy Rep [internet] 2022; 8:2656–71. Available via https://doi.org/10.1016/j.egyr.2022.01.162
51. Filzmoser P, Nordhausen K. Robust linear regression for high-dimensional data: an overview. Wiley Interdiscip Rev Comput Stat 2021; 13(4):1–18.
52. Ibrahim KSMH, Huang YF, Ahmed AN, Koo CH, El-Shafie A. A review of hybrid artificial intelligence and optimization modeling for hydrological streamlet forecasting. Alexandria Eng J [internet] 2022; 61(1):279–303. Available via https://doi.org/10.1016/j.aej.2021.04.100
53. Senyapar HND, Bayindir R. The research agenda on smart grids: foresights for social acceptance. Energies 2023; 16(18):1–31.
54. Williams B, Bishop D, Gallardo P, Chase JG. Demand-side management in industrial, commercial, and residential sectors: a review of constraints and considerations. Energies 2023;16(13):5155.
55. Symeonidis C, Nikolaidis N. Efficient deterministic renewable energy forecasting guided by multiple-location weather data 2024. Available via http://arxiv.org/abs/2404.17276
56. Trivedi R, Khadem South Implementation of artificial intelligence techniques in a microgrid control environment: current progress and future scopes. Energy AI [internet] 2022; 8:100147. Available via https://doi.org/10.1016/j.egyai.2022.100147
57. Yang Y, Javanroodi K, Nik VM. Climate change and renewable energy generation in Europe—long-term impact assessment on solar and wind energy using high-resolution future climate data and considering climate uncertainties. Energies 2022;15(1):1–19.
58. Fan C, Chen M, Wang X, Wang J, Huang B. A review of data preprocessing techniques for efficient and reliable knowledge discovery from building operational data. Front Energy Res 2021; 9(March):1–17.
59. Muhuri PS, Chatterjee P, Yuan X, Roy K, Esterline A. A long short-term memory recurrent neural network (LSTM-RNN) is employed to classify network attacks. Inf 2020; 11(5):1–21.
60. Mafarja M, Thaher T, Al-Betar MA, Too J, Awadallah MA, Abu Doush I et al. Classification framework for faulty-software using enhanced exploratory whaleoptimizer–based feature selection and random forest ensemble learning. Appl Intell 2023; 53(15):18715–57.

61. Chattopadhyay A, Hassanzadeh P, Pasha S. Predicting clustered weather patterns: a test case for applications of convolutional neural networks to spatio-temporal climate data. Sci Rep [internet] 2020; 10(1):1–13. Available via http://dx.doi.org/10.1038/s41598-020-57897-9
62. Al Mamun A, Sohel M, Mohammad N, Sunny MS, Dipta DR, Hossain EA comprehensive review of load forecasting techniques using single and hybrid predictive models. IEEE Access 2020; 8:134911–39.
63. TrờI D, Nhân S, Sai T, BÌNH South Solar Irradiance Estimation Using Artificial Neural Networks Via Assessment of Root Mean Square Error. TapchikhcnHauiEduVn [internet] 2020; 56(6):3–8. Available via https://tapchikhcn.haui.edu.vn/media/30/uffile-upload-no-title30442.pdf
64. Kuo PH, Huang CJ. A high-precision artificial neural network model for short-Term energy load forecasting. Energies 2018; 11(1):1–13.
65. Blasch E, Li H, Ma Z, Weng Y. The powerful use of AI in the energy sector: intelligent forecasting. arXiv Artif Intell [internet] 2021. Available via http://arxiv.org/pdf/2111.02026.pdf
66. Saglam M, Spataru C, Karaman OA. Electricity demand forecasting with use of artificial intelligence: the case of Gokceada Island. Energies 2022; 15(16):1–22.
67. Oudinga M. The role of artificial intelligence in enhancing energy management in microgrid systems. J Dimens Manag Public Sect 2023; 4(4):33–41.
68. Yousef LA, Yousef H, Rocha-Meneses, L. Artificial intelligence for management of variable renewable energy systems: a review of current status and future directions. Energies 2023; 16(24):8057.
69. Mukhamediev RI, Popova Y, Kuchin Y, Zaitseva E, Kalimoldayev A, Symagulov A et al. Review of artificial intelligence and machine learning technologies: classification, restrictions, opportunities and challenges. Mathematics 2022; 10(15):1–25.
70. Schenck TA, Hans CA. Hierarchical distributed scenario-based model predictive control of interconnected microgrids. 2023. Available via http://arxiv.org/abs/2304.10901
71. Xiao F. Time series forecasting with stacked long short-term memory networks. 2020; 1–7. Available via http://arxiv.org/abs/2011.00697
72. Li Y, Zhu Z, Kong D, Han H, Zhao Y. EA-LSTM: Evolutionary attention-based LSTM for time series prediction. Knowl-Based Syst 2019; 181:1–9.