DESIGN AND IMPLEMENTATION OF A REAL TIME CLOCK BASED SOLAR TRACKING SYSTEM

A. Musa[1,2], S. A. Suleiman[1] M. M. Fijabi[1], A. O. Hussain[1] and I. A. Ganiyu[1]
[1]*Dept. of Electrical and Computer Engineering, Kwara State University, Malete.*
[2]*Institute for Intelligent Systems, University of Johannesburg, South Africa.*
*twhid2001@yahoo.com

Keywords: –

PIC Microcontroller,
Real time clock,
Renewable energy,
Solar systems,
Solar panels.

Article History: –

Received: July, 2021
Reviewed: August, 2021
Accepted: August, 2021
Published: September, 2021

ABSTRACT

Solar power is the fastest growing means of renewable energy production with grid connected solar capacity increasing on average by 60% annually according to the National Center for Policy Analysis in the United States. New solar technologies will increase energy security through reliance on an indigenous, inexhaustible, and mostly import-independent resource, enhance sustainability, reduce pollution, lower the costs of mitigating global warming, and keep fossil fuel prices lower. However, the power output from solar system is yet to be maximized. Thus, a solar tracking system that is based on Real Time Clock (RTC) using PIC microcontroller to maximize the power output from solar panels is thus proposed. The system ensures that the solar panel aligns with the sun at its highest intensity. The proposed tracking system is a low cost, high accuracy, more efficient with low power consumption.

1. INTRODUCTION

Renewable energy resources have increasingly become an important part of power generation. In addition to assisting in the reduction of emission of greenhouse gases, they add the much needed flexibility to the energy resource mix by decreasing the dependence on fossil fuels. The sun is the prime source of energy, directly or indirectly, which is also the fuel for most renewable systems [1].

Among all renewable systems, solar energy, radiant light and heat from the sun, have been harnessed by humans since ancient times using a range of ever evolving technologies. The conversion principle of solar light into electricity, called Photo-Voltaic (PV) conversion, is not very new, but the efficiency improvement of the PV conversion equipment is still one of top priorities for many academic and industrial research groups all over the world. Among the proposed solutions for improving the efficiency of PV conversion, we can mention solar tracking, the optimization of solar cell configuration and geometry, new materials and technologies, etc. [2].

A Solar tracker is a system or device that orients various photovoltaic and solar thermal panels toward the sun. It ensures that the direct beam from the sun is incident normal to the surface of the panels at all times [3]. Installing a solar tracker to a solar system proves to be more efficient than a stationary solar system in terms of power generation.

1.1 Related Works

Studies on solar energy related works have been conducted by [1] to [14]. A study carried out by [1] discusses a similar tracking system using photodiode as sensors. Two photodiode sensing the position of the panel and two photodiodes to sense the mirror position for boosting voltage drop between the two sensors of the panel, the signal obtained will go to the microcontroller which calculates the ADC value.

The relationship between radiant sun light and electrical power generated can be demonstrated with

the aid of measuring equipment called photovoltaic trainer. A major drawback of the work is that the photodiodes used as the tracking device is subject to bias due to weather conditions.

Investigation of potential system benefits of simple tracking solar system using an Arduino MEGA 2560, stepper motor and light sensors reading series of values was carried out by [3]. After the testing and simulation of the prototype, it was concluded that as time increases towards noon, the difference in the energy yields decreases and is approximately equal around noon and continues to increase in difference towards sunset.

A study carried was out by [4] in the city of Riobamba, Ecuador, with the objective of implementing a two-axis solar tracking system controlled by a fuzzy logic algorithm, optimizing energy collection with respect to fixed orientation solar panels. Diffuse control was performed from the Lab VIEW platform. A prototype was built to verify the hypothesis that a solar panel located on a two-axis solar tracker uses solar energy better than one in a fixed orientation.

The work done by [6] involves the use of bi–facial solar system model for power measurement. It was established that the power of the system depends upon solar irradiation received by the surface of photovoltaic modules. A paper published by [7] proposed strategies for harnessing solar energy for electricity generation. The paper focused on radiation models that are simulated using MATLAB. A major drawback of the work is that different mathematical analysis has to be computed for different geographical areas and different time of the year.

The work in [8] involved the use of the Raspberry PI3 to collect the sensor data and processes the information to make decisions. Similar to [9], [10], [11], [12] and [13] whose works focused on solar power and tracking systems, [14] in his work designed a dual axis solar tracking system and divided the system into two main parts comprising of the mechanical design part and the electronic control unit. The mechanical design part consists of stepper motor and gear wheel.

1.2 Contributions

This work proposes a single axis time based solar tracking mechanism that adjusts automatically to track the solar movement and displays tilt angle values and its corresponding solar irradiance values, all in real-time.

1.3 Organization of paper

The rest of the manuscript is organized as follows. Section 2 is a description of the design and analysis of the system. The main functional units are discussed in detail, their characteristics are also specified. Section 3 discusses the software implementation, tracking algorithm and the mode of operation of the system. Results are presented and discussed in Section 4. Finally, the work is concluded in Section 5.

2. DESIGN AND ANALYSIS

The work is achieved through the design and implementation of units that include input, control and processing and output systems. The units simultaneously work to achieve the tracking of the sun. Thus, the system may be said to comprise four main functional units; namely: the tracking unit, the control unit, the display unit and the power supply unit.

2.1 The Tracking Unit

This unit forms the mechanical framework that carries the solar panel oriented in an optimum position against the sun. This can be achieved by comparing the input from the real time clock to the preset data stored in the microcontroller. The solar panel is attached to a stepper motor shaft, the motor rotation results in the tilting of the angle at which the solar panel is inclined. The tracking unit comprises of solar panel, real time clock, stepper motor, stepper motor driver. The specifications of the solar panel used are summarized in Table 1.

Table 1. Solar Panel Specification

S/No	Features	Description
1	Dimensions(mm)	225 by 190
2	Output Tolerance	±5%
3	Maximum Power Pmax (W)	5
4	Current at Pmax (A)	0.29
5	Voltage at Pmax (V)	17.5
6	Short circuit Current (A)	0.32
7	Open Circuit Voltage (V)	22.05

2.2 Real Time Clock module (DS3231)

The DS3231 is a low-cost, extremely accurate I2C real-time clock (RTC) with an integrated temperature compensated crystal oscillator (TCXO) and crystal. The device incorporates a battery input, and maintains accurate timekeeping when main power to the device is interrupted. The integration of the crystal resonator enhances the long-term accuracy of the device as well as reduces the piece-part count in a manufacturing line. The RTC maintains seconds, minutes, hours, day, date, month, and year information. The date at the end of the month is automatically adjusted for months with fewer than 31 days, including corrections for leap year. The operating circuit for the real time clock is given in Figure 1.

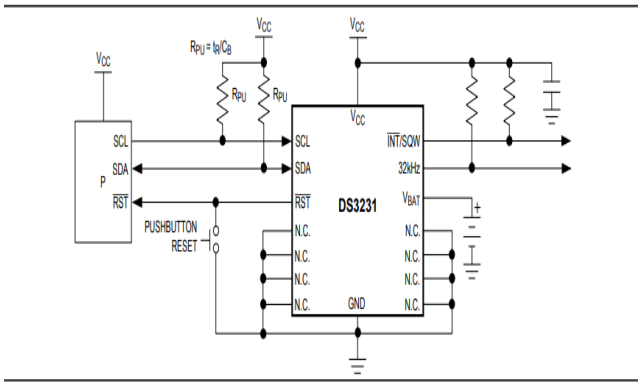

Fig. 1 Operating circuit of DS3231

2.3 Stepper Motor

The stepper motor used in this project is bipolar stepper motor, 28BYJ-48 variant. It is chosen because it provides sufficient torque to support the mechanics of the design efficiently. Table 2 shows some of the technical specifications of the stepper motor.

Table 1. Stepper Motor Specification

Rated Voltage	5v DC
Number of Phase	4
Speed variation Ratio	1/64
Stride angle	5.24˚/64
Frequency	100Hz
DC Resistance	50Ω ±7%
Pull in Torque	300gf.cm
Noise	<35db

The stepper motor is used to actualize the zenithal movement of the solar panel at different time of the day giving one degree of movement to the solar panel.

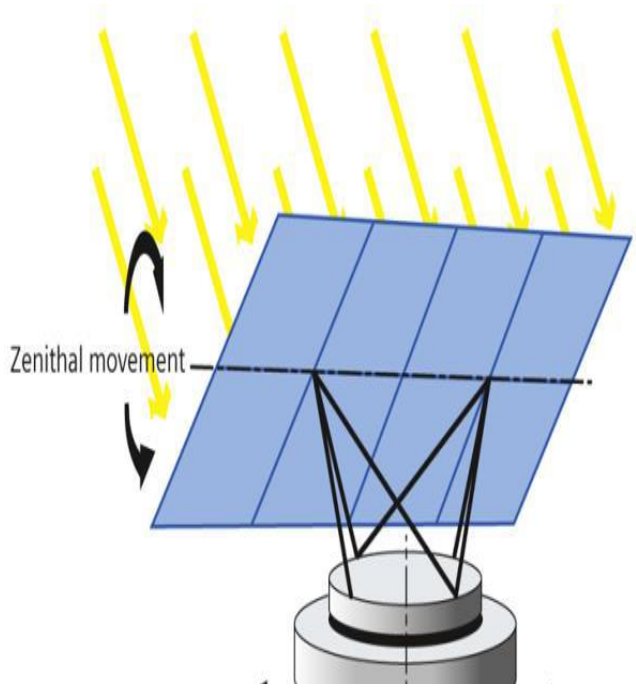

Fig. 2. Movement of the stepper motor

2.4 Stepper Motor Driver

The stepper motor driver selected for this project is the ULN2003A. it is a high-voltage, high-current Darlington arrays each containing seven open collector Darlington pairs with common emitters. Each channel is rated at 500 mA and can withstand peak currents of 600 mA. Suppression diodes are included for inductive load driving and the inputs are pinned opposite the outputs to simplify board layout. Since the motor requires higher voltage and current than the controller, it is needful to supply the motor independently.

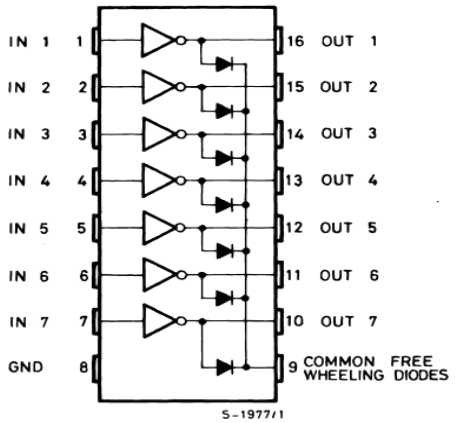

Fig. 1. ULN2003A configuration

2.5 The Control unit

The processing unit performs the overall control and decision-making function. This decision is based on set of instructions stored in the memory. It takes in series of inputs from the real time clock DS3231 and gives output commands to the motor driver which enables the motor to move to align the solar panel perpendicular to the sun. The microprocessor used in this design is the PIC16F877A microcontroller. This microcontroller is a reduced instruction set computer (RISC) that has a watchdog timer (WDT) with its own on chip RC- Oscillator for reliable operation. It is based on complementary metal oxide semiconductor (CMOS) technology. It has a wide range of operating voltage usually from 3.3v to 5.5v and available for industrial and commercial applications. It has a total number of 40 pins with 33 pins for input and output.

There is an EEPROM which makes it possible to permanently store some information such as transmitter codes, receiver frequencies and other related data. The first pin is the master clear pin. It resets the microcontroller and is active low, meaning that it should constantly be given a voltage of 5V and if 0 V are given then the controller is reset. Resetting the controller will bring it back to the first line of the program that has been burned into the IC.

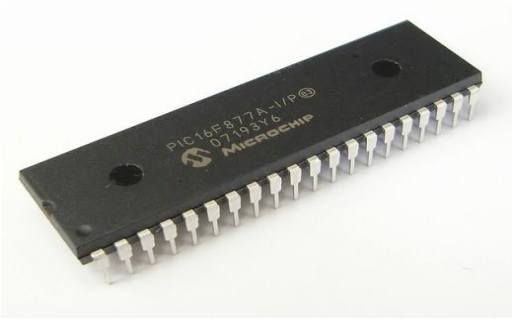

Fig. 2. PIC16F877A Microcontroller

The technical specifications of the microcontroller are stated in the Table 3.

Table 2. Technical specification of the microcontroller

Operating Frequency	DC- 20MHz
Flash Program Memory	8k
Data Memory(Bytes)	368
EEPROM data memory(Bytes)	256
Interrupt	15
I/O Ports	Ports A,B,C,D,E
Timers	3
Analog comparators	2
Analog to Digital module	8 input channel
Instruction set	35 instructions

2.6 The Display Unit

The display unit outputs two main values: the real time clock value and the tilt angle of the solar panel.

The 16x2 LCD is the choice of display used. It is a basic module commonly used in various devices and circuits. These modules are preferred over seven segments and other multi segment LEDs because they are economical, easily programmable, with no special display limitations.

2.7 The power supply unit

The power supply unit is responsible for supplying a regulated 5V DC and unregulated 12V DC supply to the entire circuit. The unit is a simple 12V DC power adapter delivering 2A current. However, the energy from the system could be used to power the motor driver and the control unit.

The 12 V lithium battery supplies the unregulated DC voltage and this serves as input to the voltage regulator. The voltage regulator performs the basic function of outputting a constant voltage of 5V. The capacitor performs the basic filtering function. Fig. 5 contains a schematic of the power supply circuitry.

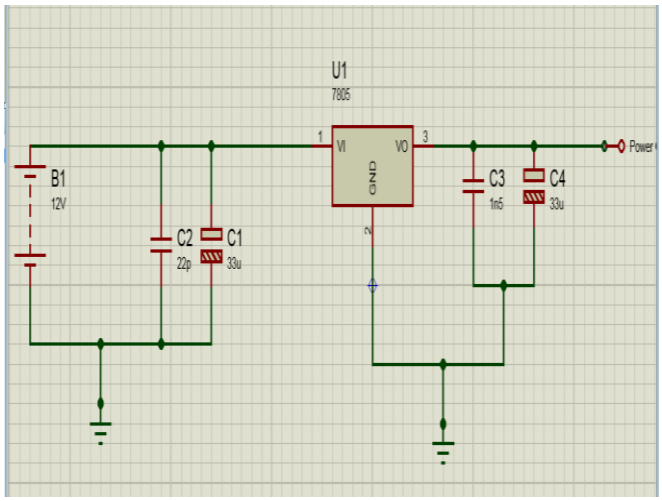

Fig. 3. Power Supply Circuitry

3. IMPLEMENTATION

3.1 Software Implementation

The program for the design is written with the MPLAB X IDE in C programming language and uploaded to the microcontroller via programmer optimized for microchip microcontrollers known as PICkit 3.

3.2 Tracking algorithm

The zenithal angle is chosen as the reference angle which the microcontroller moves the stepper motor so as to track the position of the sun. It is important to establish that zenithal angle varies with respect to the latitude, time of the day and season of the year. The information programmed in the microcontroller is with respect to Malete in Moro Local Government Area of Kwara State with longitude 4.4820812˚ and latitude 8.734276˚.

The tracking angle about the polar-axis is equal to the sun's hour angle and the tracking angle about the perpendicular axis is dependent on the declination angle. The tracking velocity is almost constant at 15 degrees per hour. The accuracy of the tilt-roll tracking system relies upon how well the roll-axis can be aligned in parallel with the polar-axis, which is also latitude dependent [5]. The information about solar parameter with respect to the stipulated geographical location is obtained using the kesian.casio calculator. The kesian.casio algorithm provides information on the solar elevation, zenith angles and azimuth angles for 24 hours. The initial orientation of the solar panel with respect to the zenith angle is at 90 degrees. Thus as the solar elevation changes, the zenith angle also changes. At mid day when the solar altitude is at 90 degrees the zenithal orientation of the solar panel will be at 0 degree. The different zenithal, azimuth and elevation information for different time of the day in Malete provided by the kesian.casio calculator is given in Fig. 6.

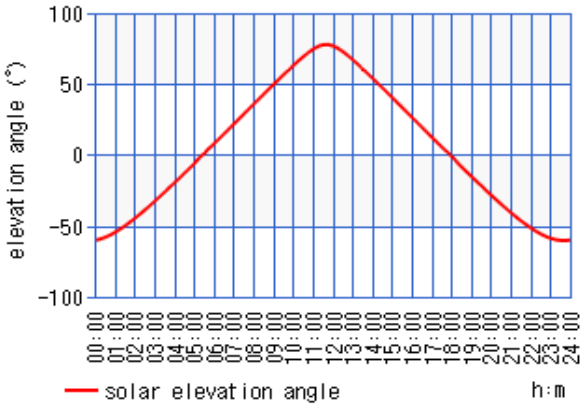

Fig. 4. Solar Elevation Angles

From the information in Fig. 6, the real time clock module provides the microcontroller with the timing in which the microcontroller moves the stepper motor appropriately for the solar tracking operation.

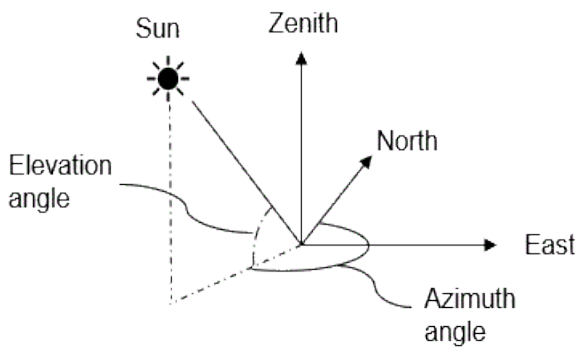

Fig. 5. Tracking angles

3.3 Mode of operation and flow chart

When the controller is powered, variables are declared, I/O ports are initialized and then information from the real time clock is monitored by the microcontroller.

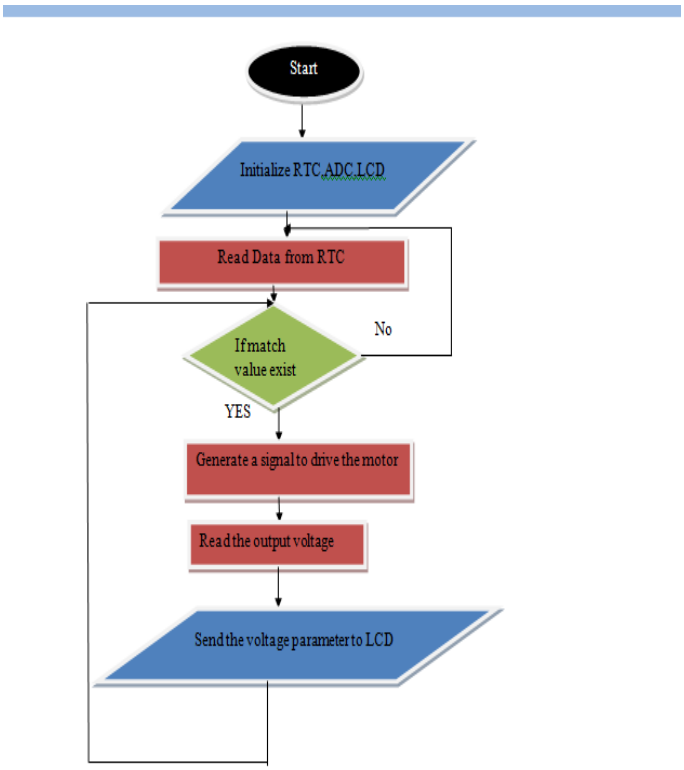

Fig. 6. Flow chart of the tracking algorithm

The motion of the solar panel occurs when the ULN2003A stepper driver is enabled. The stepper motor driver has a common pin and ground pin used for powering the motor. The mode of operation can be simplified using a flowchart given in Fig. 8.

The information from the real time clock is compared with the preset data stored in the EEPROM of the microcontroller. If the data matches, a signal is sent to the stepper motor through the stepper motor driver to move the solar panel. If there is no match between the data, the stepper motor maintains its position.

The preset values stored in the microcontroller also known as the tilt value contains information on the time in which microcontroller is supposed to generate a signal such that the stepper motor would rotate through the stepper motor driver. There are four tilt values set in the EEPROM of the microcontroller in addition to the reverse movement.

4. RESULTS AND DISCUSSION

Table 1. Results obtained for June 23, 2021

Time	Voltage of fixed solar panel (volts)	Voltage of solar tracking panel (volts)
6:00 am	0.00	0.00
7:00 am	1.32	1.32
8:00 am	7.1	7.1 (Initial Position)
9:00 am	10.9	10.9
10:00 am	10.4	13.2 (First Tilt)
11:00 am	11.9	15.1
12:00 pm	12.2	16.9 (Second Tilt)
1:00 pm	12.1	16.8
2:00 pm	10.8	14.9 (Third Tilt)
3:00 pm	9.4	14.2
4:00 pm	7.3	12.8(Fourth Tilt)
5:00 pm	6.5	9.3
6:00 pm	1.5	3.2 (Reverse)

Table 4, Table 5 and Table 6 show various voltage readings obtained using a multi-meter from the solar tracker and the fixed (horizontally placed) solar panel of the same capacity at different time intervals of the day.

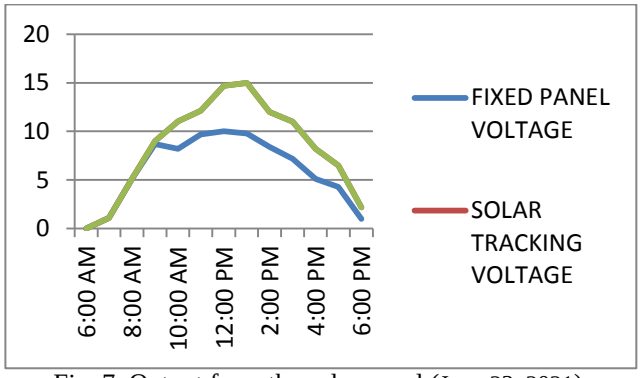

Fig. 7. Output from the solar panel (June 23, 2021)

Table 2. Results obtained for August 7, 2021

Time	Voltage of fixed solar panel (volts)	Voltage of solar tracking panel (volts)
6:00 am	0.00	0.00
7:00 am	1.10	1.11
8:00 am	5.10	5.13 (Initial Position)
9:00 am	8.70	9.00
10:00 am	8.20	11.02 (First Tilt)
11:00 am	9.70	12.12
12:00 pm	10.00	14.70 (Second Tilt)
1:00 pm	9.80	14.99
2:00 pm	8.40	12.7 (Third Tilt)
3:00 pm	7.20	12.00
4:00 pm	5.10	10.4(Fourth Tilt)
5:00 pm	4.30	7.10
6:00 pm	0.99	2.20(Reverse)

Similarly, Fig. 9 to Fig. 11 show the plots of the various readings obtained. It can be observed from the plots that there is comparatively much energy yield in the tracking system than the fixed panel. Also, as time increases towards noon, the difference in the energy yield decreases and is approximately equal around noon and continues to increase in difference towards sunset.

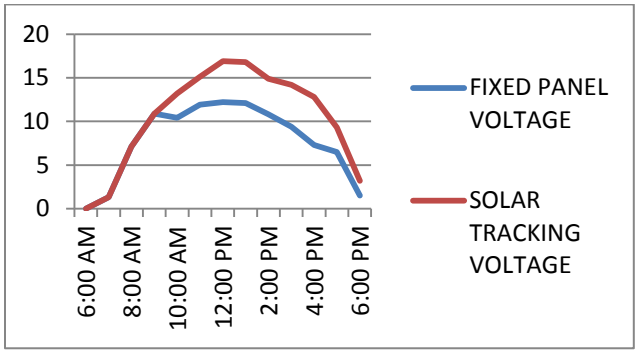

Fig. 8. Output of the solar panel (August 7, 2021)

Table 3. Results obtained for August 30, 2021

Time	Voltage of Fixed Solar Panel (volts)	Voltage of Solar Tracking Panel (volts)
6:00 am	0.00	0.00
7:00 am	1.32	1.32
8:00 am	7.1	7.1 (Initial Position)
9:00 am	10.9	10.9
10:00 am	10.4	13.2 (First Tilt)
11:00 am	11.9	15.1
12:00 pm	12.2	16.9 (Second Tilt)
1:00 pm	12.1	16.8
2:00 pm	10.8	14.9 (Third Tilt)
3:00 pm	9.4	14.2
4:00 pm	7.3	12.8(Fourth Tilt)
5:00 pm	6.5	9.3
6:00 pm	1.5	3.2 (Reverse)

5. CONCLUSION

In this work, a solar tracking system has been designed and implemented with the result from the tests showing reasonable increase in the energy yield. The mechanical components were done with

aluminum sheets and stepper motors were used as the actuators.

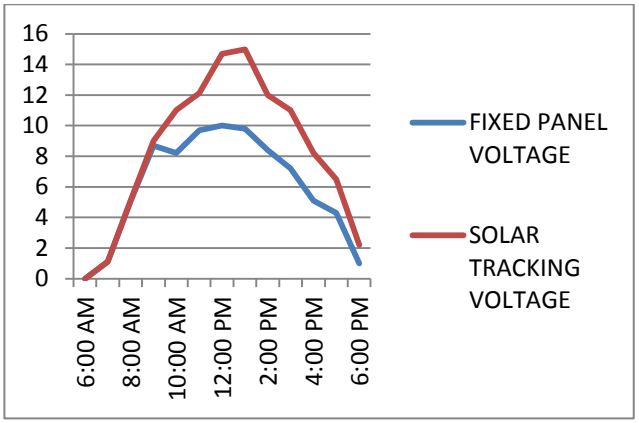

Fig. 9. Output of the solar panel (August 30, 2021)

A real time clock module DS3231 serves as the input to the microcontroller. The PIC16F877A microcontroller was used to control the movement of the solar panel. The decision-making of the microcontroller is based solely on available data collected by the real time clock module which makes the system intelligent and responsive.

REFERENCES

[1] P. K. Das, M. A. Habib, M. Mynuddin, K. Das, A. Habib, and M. M. Microcontroller, "Based Automatic Solar Tracking System with Mirror Booster," *Int. J. Sustain. Green Energy*, vol. 4, no. 4, pp. 125–136, 2015, doi: 10.11648/j.ijrse.20150404.11.

[2] K. Anusha and S. C. M. Reddy, "Design and Development of Real Time Clock based efficient Solar Tracking System," *Int. J. Eng. Res. Appl.*, vol. 3, no. 1, pp. 1219–1223, 2013.

[3] Y.-O. Udoakah and E. Chukwu, "Design and Implementation of a Dual Axis Solar Tracker Using Arduino Microcontroller," *Elektr. J. Electr. Eng.*, vol. 17, no. 3, pp. 41–48, 2018, doi: 10.11113/elektrika.v17n3.116.

[4] H. M. Barrera-erreyes, J. Francisco, A. Flores, and V. Vega, "Fuzzy Logic Algorithm for Solar Tracking System," no. July, 2020.

[5] K. K. Chong and C. W. Wong, "General formula for on-axis sun-tracking system and its application in improving tracking accuracy of solar collector," vol. 83, pp. 298–305, 2009, doi: 10.1016/j.solener.2008.08.003.

[6] S. A. Kalhoro, S. H. Abbas Musvi, S. Ali, S. Rahoojo, and A. Nawaz, "An Economical and Relatively Efficient Implementation of the Real–Time Solar Tracking System," *3C Tecnol. innovación Apl. a la pyme*, no. May, pp. 68–99, 2019, doi: 10.17993/3ctecno.2019.specialissue2.68-99.

[7] M. K. Sharma, D. Kumar, S. Dhundhara, D. Gaur, and Y. P. Verma, "Optimal Tilt Angle Determination for PV Panels Using Real Time Data Acquisition," *Glob. Challenges*, vol. 4, no. 8, p. 1900109, 2020, doi: 10.1002/gch2.201900109.

[8] L. A. S. Ferreira, H. J. Loschi, A. A. D. Rodriguez, Y. Iano, and D. A. Do Nascimento, "A solar tracking system based on local solar time integrated to photovoltaic systems," *J. Sol. Energy Eng. Trans. ASME*, vol. 140, no. 2, 2018, doi: 10.1115/1.4039094.

[9] "Solar Power Information and Facts." https://www.nationalgeographic.com/environment/global-warming/solar-power/ (accessed Feb. 15, 2021).

[10] "Synopsy report for Solar Vacuum Cleaner | Vacuum Cleaner | Solar Energy." https://www.scribd.com/doc/219338357/Synopsyreport-for-Solar-Vacuum-Cleaner (accessed Feb. 15, 2021).

[11] A. A. Sneineh and W. A. Salah, "Design and implementation of an automatically aligned solar tracking system," *Int. J. Power Electron. Drive Syst.*, vol. 10, no. 4, pp. 2055–2064, 2019, doi: 10.11591/ijpeds.v10.i4.2055-2064.

[12] A. S. M. R. Haider, "Islamic University of Technology Instrumentation & Measurements Lab-MCE 4408 Autonomous Solar Tracking Device," no. August, 2019, doi: 10.13140/RG.2.2.32103.27044.

[13] R. F. Fuentes-Morales *et al.*, "Control algorithms applied to active solar tracking systems: A review," *Sol. Energy*, vol. 212, no. November, pp. 203–219, 2020, doi: 10.1016/j.solener.2020.10.071.

[14] N. Krishna Kumar and V. Subramaniam, "Real time clock based energy efficient automatic dual axis solar tracking system," *Eng. J.*, vol. 22, no. 1, pp. 15–26, 2018, doi: 10.4186/ej.2018.22.1.15.