JOURNAL OF SCIENCE TECHNOLOGY AND EDUCATION 13(1), MARCH, 2025
ISSN: 2277-0011; Journal homepage: www.atbuftejoste.com.ng

Design and Fabrication of Smart Solar Powered Evaporative Desert Cooler for Preservation of Fruits/Vegetables in Maiduguri and Environs

Maina, M. B., Musa, H., Muhammad, A. B., Abdulrahim, A. T.
Department of Mechanical Engineering,
University of Maiduguri Borno State Nigeria

ABSTRACT
The quality of fresh fruits and crops depends on post-harvest handling, transportation, distribution and storage. The design of a solar-powered evaporative cooling system was modified and fabricated by smartly operating to substantially improve the existing evaporative cooling systems around the study area and curb the rate of post-harvest losses. The system was modified by using locally available materials these include a Micro-processor (Arduino UNO), a water pump, a deep cycle battery, a solar panel, and a floater control switch in other to enhance the operational efficiency of the evaporative desert cooler by providing continuous energy and automating water distribution for the cooler using a sustainable energy source. The system average test results with no load show a significant difference between the ambient and Cooler relative humidity of 81.1% and 87.2% while the average dry bulb temperature was observed to be 26.2oC for the ambient and 24oC for the Cooler respectively showing tremendous achievement in the performance by maximally dropping the temperature and extending postharvest life for certain fruits and vegetables in the Cooler. Implementation of solar-powered appliances in different food preservation systems would offer a potential solution to the perishables wastage and shortage problems in the study area and the country by extension.

ARTICLE INFO
Article History
Received: October, 2024
Received in revised form: December, 2024
Accepted: February, 2025
Published online: March, 2025

KEYWORDS
Smart Solar powered, Arduino Uno, Sustainable Energy, Perishables Wastage

INTRODUCTION

Most of the post-harvest losses incurred on fruits and crops in developing countries are due to lack of adequate and proper storage facilities. While refrigerated cool stores are expensive to buy, install and run, but they are still the best method of preserving fruits and crops. Consequently, in developing countries, there is an interest in simple low-cost alternatives, many of which depend on evaporative cooling. Cooling through evaporation is an ancient practice, but effective method of lowering temperature of fruits and crops (FA0, 1986). The quality of fresh fruits and crops depends on post- harvest handling, transportation, distribution and storage (Kraemer,.et al 2016).

Compared with several temperate fruits and vegetables, tropical and sub-tropical vegetables such as tomatoes and carrots present greater storage and transportation problems of their perishable nature. Due to their high moisture content, fruits and vegetables have very short life and are liable to spoilage. Moreover, they are living entities and carry out respiration, transpiration and ripening even after harvest. Metabolism in fresh fruits and vegetables continues even after harvest and the deterioration rate increases due to ripening, senescence and unfavourable environmental factors. Hence, preserving these types of produce in their fresh form demands that the chemical, bio-chemical and physiological changes are restricted to a minimum by close control of space temperature and humidity (Dvizama, (2000) and ASHRAE, (2013)).

In developing countries, method employed for extending shelf life and minimizing

Corresponding author: Maina, M. B
m.muhammad@unimaid.edu.ng
Department of Mechanical Engineering University of Maiduguri Borno State Nigeria.
© 2025. Faculty of Technology Education. ATBU Bauchi. All rights reserved

post-harvest losses of perishable produce include mechanical refrigeration and controlled atmosphere. These techniques are highly capital intensive, they require highly skilled manpower which is either lacking or inadequate. These cooling methods, except adiabatic cooling are expensive for small scale peasant farmers, retailers and wholesalers, as they require electric power. Moreover, the existing mechanical refrigerating system, proper storage conditions are not often put into consideration as stored items (fruits and vegetables) were normally subjected to excess chilling or freezing. These injuries effects on stored vegetable products are often very severe, hence one of the major reasons for low efficiency of this systems in extending the shelf life of fruits and vegetables.

Extending shelf-life can also be achieved by using less expensive methods of evaporative cooling (FAO,2016). In this paper, an attempt is made to modify the basic concepts and principles of evaporative cooling system with their application in storage of fruits & vegetables and comparison of economics of storage in evaporative cooled room with that in cold storage as reported by some authors. Future projections stating the growing gap between energy supply and demand for storage purposes have motivated the development of environmentally benign energy technologies. Among others, solar energy, as a major renewable and eco-friendly energy source with the most prominent characteristic of inexhaustibility, seems to be more promising to offer sustainable solutions towards environmental protection and conservation of conventional energy sources. Thus, solar energy-based systems can meet energy demands to some extent to maintain the balance in the ecosystem. However, public acceptance of solar energy technologies depends heavily on factors such as efficiency, cost-effectiveness, reliability and availability (Feng et al 2014: Rakesh and Marc 2011).

Available literature on the use of evaporative cooler within the study area (Maiduguri in North-Eastern Nigeria) has shown that no work with solar energy storage was carried out; as a result, only passive cooling systems were used during the day when the sun shines. The limited use of abundant solar energy in the study area (Maiduguri) has affected the effectiveness of Evaporative coolers in increasing the shelf life of most fruits/vegetables. Therefore, this study intends to bridge the limitation (gap) by using an active solar system to extend the use of Evaporative Coolers beyond day period by storing the abundant solar energy in a deep cell battery for active use throughout the night.

The design modification using a Micro-processor (Arduino) will also increase the reliability of the Evaporative solar powered cooler as it improves operational performance of the system by smartly changing power supply between the panel and the deep cell battery. It is also an approach and or solution for bridging the gap between solar energy availability and demand, especially for this and similar purposes in the study area (Maiduguri). In recent times (2022-2024) with incessant power lost in and around the study area (Maiduguri and environs) due to the activities of insurgents conventional energy sources have become costly and almost inaccessible for most of the populace, Therefore, the need for storage of fruits and vegetables is of great importance because not all the harvested crops in general will be used immediately after harvest; hence means of storing the fruits and vegetables before exceeding their shelf-life will greatly reduce post-harvest losses.

Some methods of preservation of raw and processed fruits and vegetables include storage in ventilated shed; waxing and chemical treatments (Olosunde,2006) can be minimized with careful used of evaporative coolers and storage at low temperature. It also reduces economics losses due to rottened fresh crops and availability of fresh crops can be extended by the use of the system, wastages as a result of poor storage shall be curtailed/minimized.

METHODS

Study Area

Maiduguri is a city found in Borno, Nigeria. It is located at 11.85 latitude and 13.16 longitudes and it is situated at elevation 325 meters above sea level. Maiduguri, also called

Corresponding author: Maina, M. B
m.muhammad@unimaid.edu.ng
Department of Mechanical Engineering University of Maiduguri Borno State Nigeria.
© 2025. Faculty of Technology Education. ATBU Bauchi. All rights reserved

JOURNAL OF SCIENCE TECHNOLOGY AND EDUCATION 13(1), MARCH, 2025
ISSN: 2277-0011; Journal homepage: www.atbuftejoste.com.ng

Yerwa by locals, is the capital and the largest city of Borno State in north-eastern Nigeria. The city sits along the seasonal Ngadda River which disappears into the Firki swamps in the areas around Lake Chad.

Fig 1. Location of the study area

Smart Solar Powered Evaporative Desert Cooler Materials and Design Considerations

The principle and objectives of any designer is to produce a product to withstand or perform satisfactorily, for a stated period of time under specified condition at a minimum cost of production and maintenance. Before the design, modification and construction of the Smart solar powered evaporative desert cooler it is necessary to consider and establish certain design parameters. The following are design parameters considered when designing and constructing the Smart evaporative desert cooler.

Selection of materials that can withstand the stress subjected on the evaporative cooler and the temperature of the evaporative unit, Sizing, cooling and storage capacity, Distance between the reservoir tank and overhead tank, Heat load design. Air requirement, Pad design, Water circulation and Power requirement. Selection of proper material is one of the major steps in design process because, it is the crucial decision that links calculation with a working design. The best material is one which serves the desired objectives at minimum cost. Thus, a poorly chosen material can add to manufacturing cost and also a failure of the system parts which will affect the performance of the system. The following factors was considered while selecting the material. Availability of the materials, Suitability of the materials for the working conditions in service and the cost of materials.

The wisest choice should be made keeping in view the above factors to achieve the efficient utilization of the material. For the design, modification and construction of the solar powered evaporative desert cooler for smart operation. The following properties of available materials are considered. Good ductility, Strength, Toughness, Formability, Thermal conductivity, Recyclability, Durability, Surface appearance, good corrosion resistance and availability and economical. Hence, for this study the basis for selecting engineering materials is based on availability, suitable properties, economic consideration, environmental factors and efficiency in service operation as elaborated in Table 1.

Corresponding author: Maina, M. B
m.muhammad@unimaid.edu.ng
Department of Mechanical Engineering University of Maiduguri Borno State Nigeria.
© 2025. Faculty of Technology Education. ATBU Bauchi. All rights reserved

Table 1: Materials used for the project and their various properties with place of application

S/NO	Component/part	Material	Properties	Uses
1.	Overhead tank	Mild steel	Stronger, durability, low cost, readily available, good toughness, corrosion resistance when coated	For the deliverance of water through the top water connection pipe to the jute sack (pad)
2.	Evaporative unit	Mild steel	Stronger, durability, low cost, readily available, good toughness, corrosion resistance	For the storage of fresh crops and vegetables
3.	Control valve	Brass	Hardness, corrosion resistance, hygiene, colour, ductility	For controlling the flow of water
4.	Reservoir tank	Galvanized sheet	Stronger, durability, low cost, readily available, good toughness, corrosion resistance when coated	For the storage of water
5.	Insulator	Fibre glass	High strength to weight ratio, good tensile strength but brittle, rigidity, corrosion resistance	For retaining water and reduction of heat in the chamber
6.	Piping system	Galvanized iron pipe	Corrosion resistance, strength, hardness, density, readily available	For the deliverance of water from the bottom tank to the top tank
7.	Water connection system	Galvanized pipe	Corrosion resistance, readily available, good toughness, durability	For the distribution of water across the jute sack (pad)
8.	Pad	Jute sack cloth material	High tensile strength, bio-degradable, recyclable, cheaper, and ability to retain water	For retaining water and the droplet of water into the bottom water connection pipe
9.	Angle bar	Mild steel	Weldability, very durable, good thermal properties and it is readily available at low cost	For the construction of the frame of the complete system
10.	Arduino UNO (Atmega328p)	Microprocess--or	low output impedance, linear output, and precise inherent calibration	General temperature sensing applications.

Design Criteria of The Cooling System

The storage system is rectangular in shape, and the design specifications for the system as well as the top tank and the bottom tank was done in accordance with Adeniran et al., 2011.

Design of Front and Rear Side of the Storage Chamber

The design of the front side of the system (pad area) was achieved using Equation 1;

$$Af = Hf \times Lf \quad (1)$$

Where; Af= Area of front side, Lf= Length of front side, Hf = Height of front side. Similarly, the rear side has the same design with the front side, with an open space for the insertion of suction fan.

Corresponding author: Maina, M. B
m.muhammad@unimaid.edu.ng
Department of Mechanical Engineering University of Maiduguri Borno State Nigeria.
© 2025. Faculty of Technology Education. ATBU Bauchi. All rights reserved

JOURNAL OF SCIENCE TECHNOLOGY AND EDUCATION 13(1), MARCH, 2025
ISSN: 2277-0011; Journal homepage: www.atbuftejoste.com.ng

Design of Left- and Right-Hand Side of the Storage Chamber

The design for the left-hand side of the storage chamber was done using Equation 2;

Al = Hl × Bl----------(2)

Where; Al = Area of left side of the storage chamber, Hl= length of the left side of the storage chamber, Bl = Breadth of the left side of the storage chamber. Similarly, the right-hand side of the storage chamber has the same design with the left-hand side, but with a door for the opening and closing of the storage chamber.

Volume of the Storage Chamber

The capacity of the storage chamber was determined using Equation 3;

Vc= Lc× Bc× Hc----------(3)

Where; Vc= Volume of the storage chamber, Lc= length of the storage system, Bc= breadth of the storage chamber, Hc= Height of the storage chamber.

Volume of the Top Tank

The capacity of the top tank was determined using Equation 4;

Vt = Lt × Bt× Ht----------(4)

Where; Vt = volume of the top tank, Lt = length of the top tank, Bt= breadth of the top tank, Ht= Height of the top tank.

Volume of the Bottom Tank

The capacity of the bottom tank was determined using Equation 5;

Vb= Lb× Bb × Hb----------(5)

Construction of the evaporative Cooler components

The following components were constructed and assembled based on the prior design considerations; Top tank, Evaporative chamber, Bottom/reservoir tank and Frame.

Top Tank

A galvanized sheet was measured, cut and bent to form a rectangular tank with a height of 400mm, length of 500mm, and breadth of 380mm. An electric arc welding machine was used to weld the cut and bend part together and angle grinder was used to file the welded part to give a smooth surface. Figure 1 shows the details of the overhead tank.

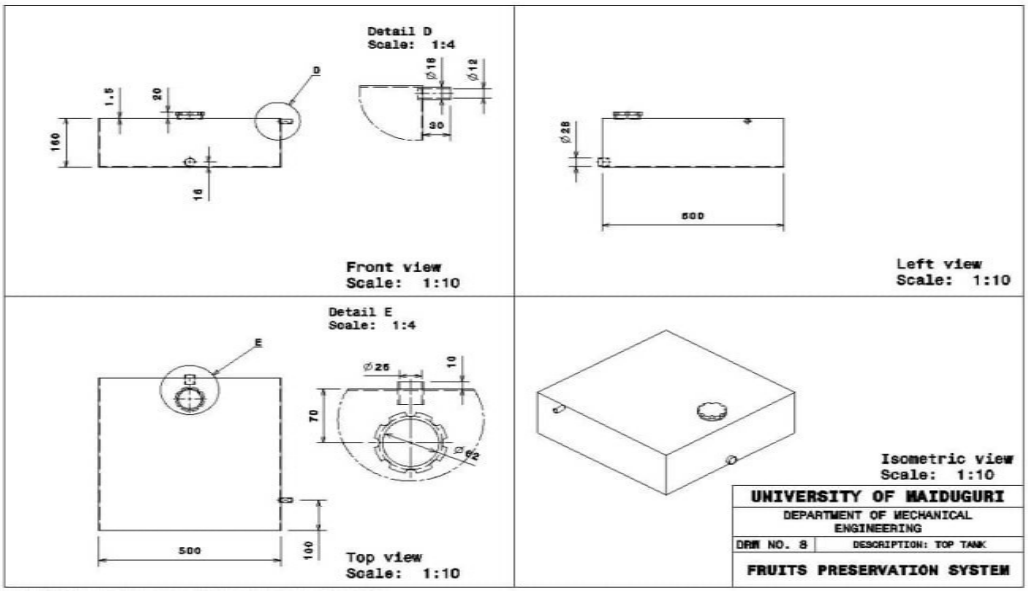

Corresponding author: Maina, M. B
m.muhammad@unimaid.edu.ng
Department of Mechanical Engineering University of Maiduguri Borno State Nigeria.
© 2025. Faculty of Technology Education. ATBU Bauchi. All rights reserved

JOURNAL OF SCIENCE TECHNOLOGY AND EDUCATION 13(1), MARCH, 2025
ISSN: 2277-0011; Journal homepage: www.atbuftejoste.com.ng

Figure 1. Details of the overhead tank

Evaporative Storage Cooling Chamber

A galvanized sheet was measured, cut and bend to form a rectangular cooling storage chamber with a height of 500mm, length of 50mm and breadth of 540mm. An electric arc welding machine shall also be used to weld the part together. The front side of the chamber shall be left open for the insertion of jute sack pad. The rear side shall also have a space for the suction fan, and the right-hand side shall have a door for the opening and closing of the storage chamber. Figure 2 (a and b) shows details of cooling chamber and of fruits tray.

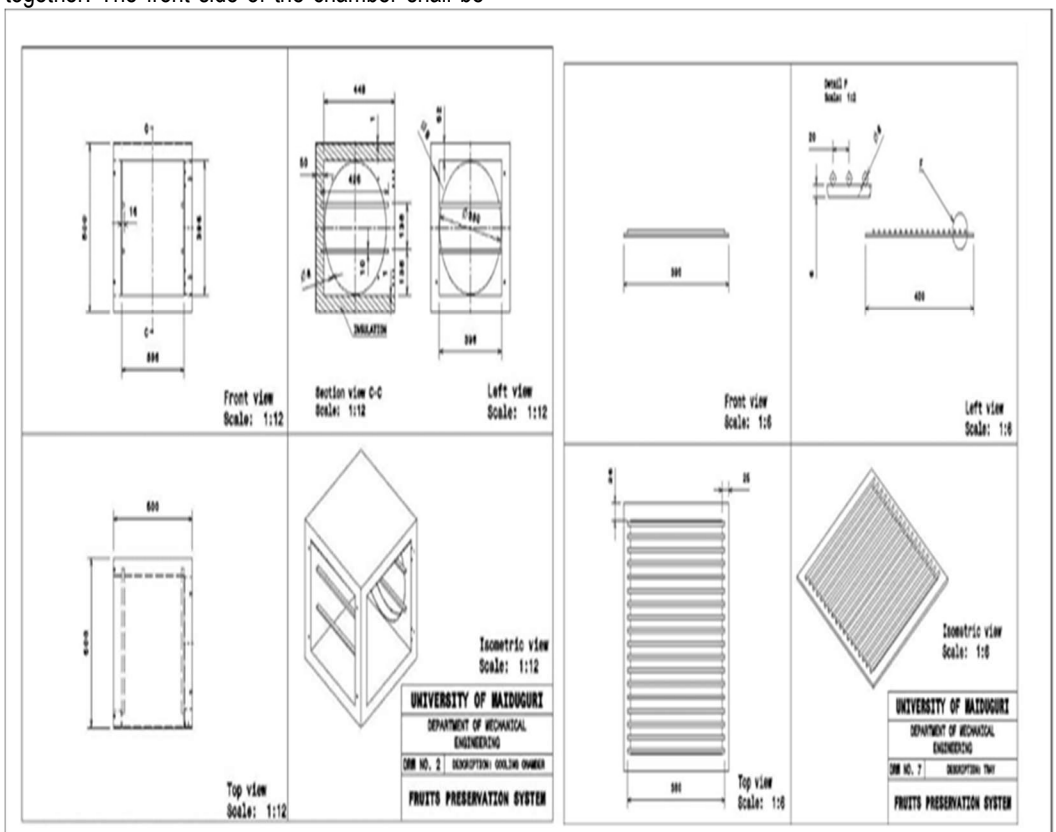

fig. 2. (a) Details of cooling chamber fig. 2. (b). Details of fruit tray

Reservoir Tank

A galvanized sheet was measured, cut and bend to form a rectangular tank with a height of 160mm, length of 500mm, and breadth of 580mm. A hole was bored at the left-hand side of the tank for the connection of a water pump. Figure 3 shows details of the *Reservoir* tank.

Corresponding author: Maina, M. B
m.muhammad@unimaid.edu.ng
Department of Mechanical Engineering University of Maiduguri Borno State Nigeria.
© 2025. Faculty of Technology Education. ATBU Bauchi. All rights reserved

JOURNAL OF SCIENCE TECHNOLOGY AND EDUCATION 13(1), MARCH, 2025
ISSN: 2277-0011; Journal homepage: www.atbuftejoste.com.ng

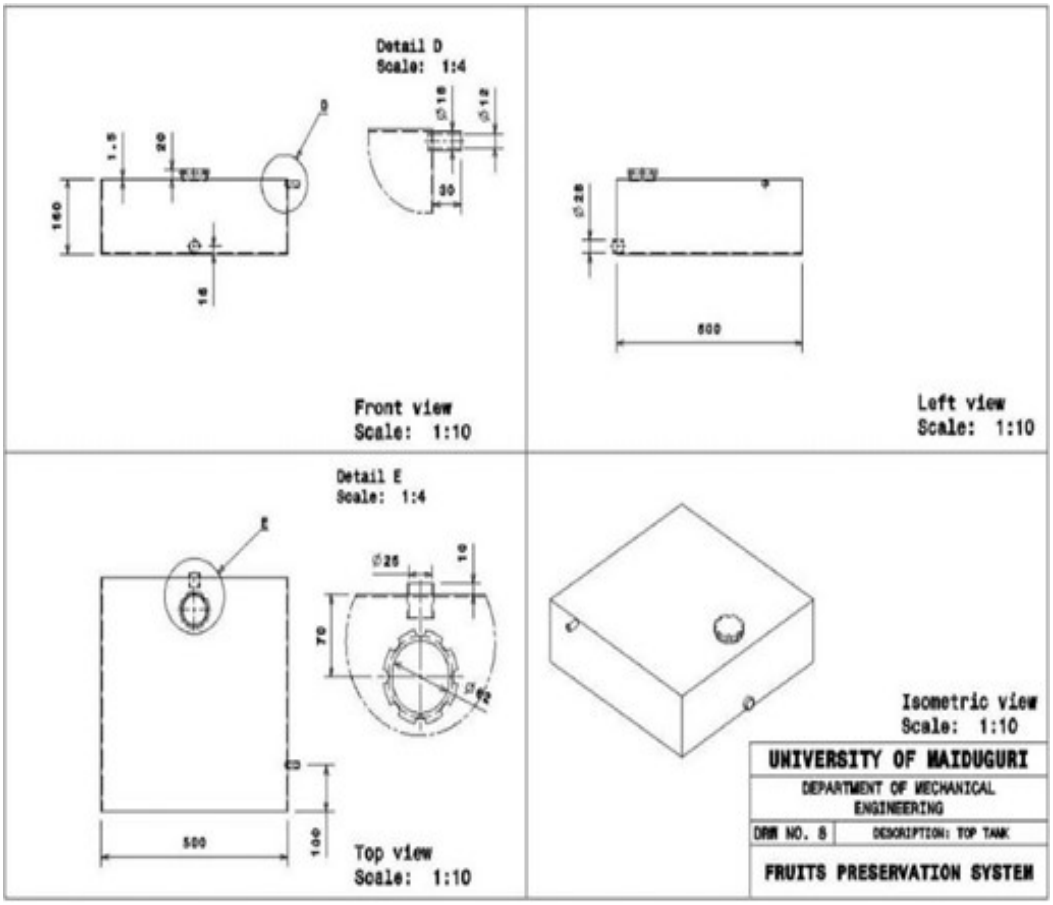

Figure 3. Details of the Reservoir Tank

The Pad

The material that was used for this experiment was jute pad material. The pad was framed with a square pipe of 2.5cm by 2.5cm and shall be covered by a wire mesh of 1 by 2 inch. The pad was made with a thickness of 2cm. It was placed opposite to the suction fan. Fig.4 shows details of the Jute pad.

Corresponding author: Maina, M. B
m.muhammad@unimaid.edu.ng
Department of Mechanical Engineering University of Maiduguri Borno State Nigeria.
© 2025. Faculty of Technology Education. ATBU Bauchi. All rights reserved

JOURNAL OF SCIENCE TECHNOLOGY AND EDUCATION 13(1), MARCH, 2025
ISSN: 2277-0011; Journal homepage: www.atbuftejoste.com.ng

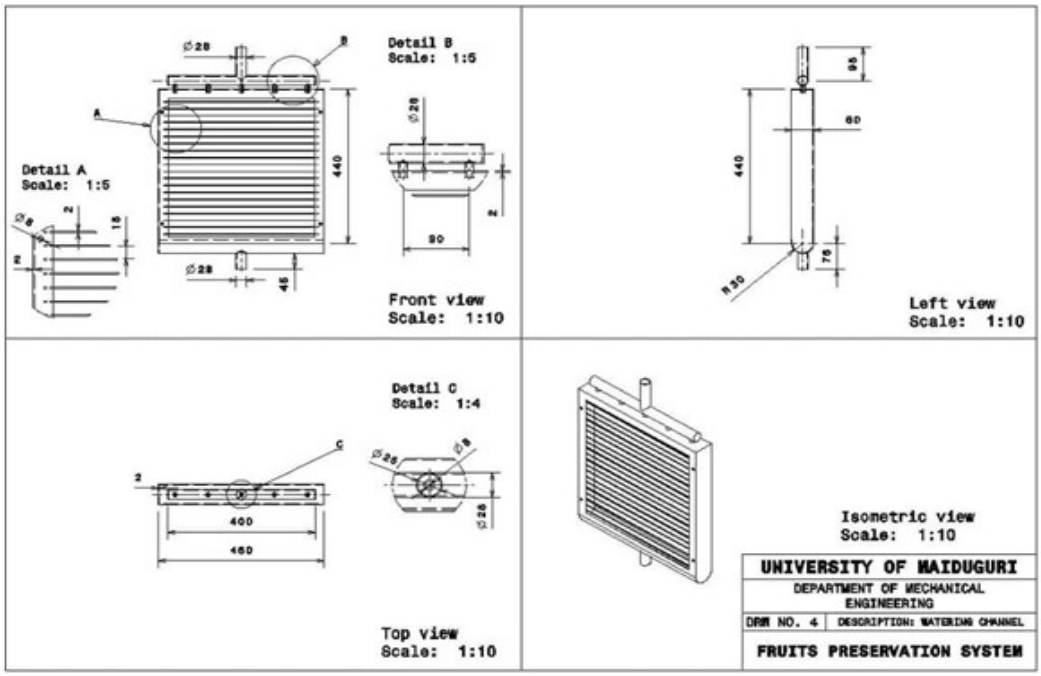

Fig.4. Details of the Jute pad

Suction Fan

The fan that was used for this design and powered by solar battery and solar panel. Its major work is to suck air from the wetted Jute pad to cause a cooling effect inside the chamber. Fig. 5 shows details of the suction fan.

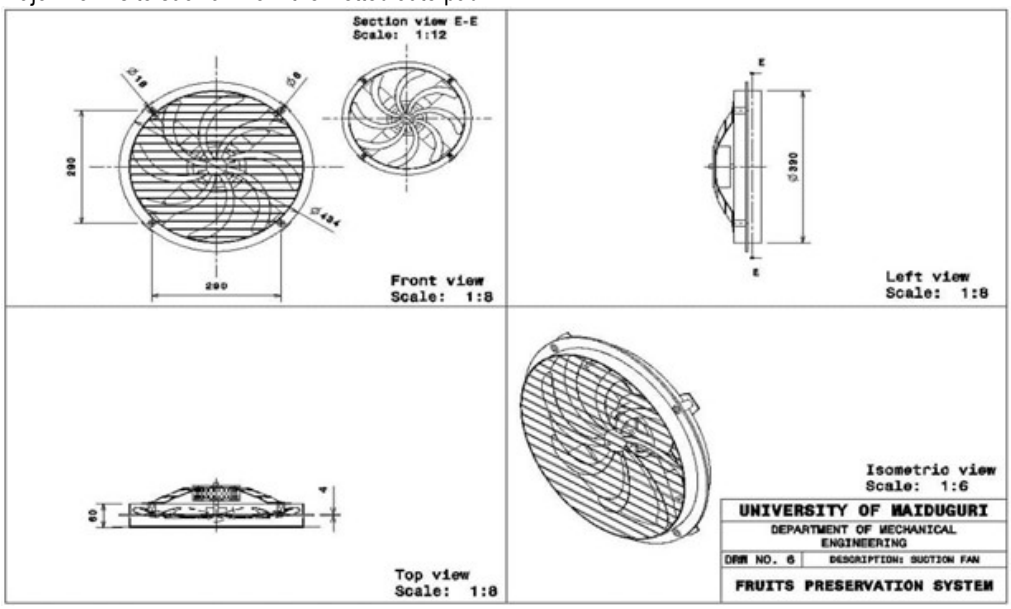

Fig. 5. Details of the suction fan

Corresponding author: Maina, M. B
m.muhammad@unimaid.edu.ng
Department of Mechanical Engineering University of Maiduguri Borno State Nigeria.
© 2025. Faculty of Technology Education. ATBU Bauchi. All rights reserved

JOURNAL OF SCIENCE TECHNOLOGY AND EDUCATION 13(1), MARCH, 2025
ISSN: 2277-0011; Journal homepage: www.atbuftejoste.com.ng

Water Distribution and Controller Box operation

The system has two water tanks that store water; the overhead tank drip water through a perforated connection pipe lined with pinholes that drip water on the pad and drain down into the *Reservoir* tank through a trough. The water was collected at the *Reservoir* tank which then can be conveyed back to the overhead tank through a 12mm diameter galvanized pipe using a water pump (0.5Hp) also using a Battery-based power supply with on/off switch Arduino Uno a microcontroller board based on Atmega328p which allows you to program the Arduino in order for it to be able to execute commands and make decisions based on various energy inputs i.e smartly changing between available sunshine hours (panel supply) and off-sunshine hours (Battery supply). It has14 digital input/output pins as shown in plate 1.1. The circulation continue for the system and the pump operation was controlled by a floater switch. The rate of water that discharge from the overhead tank into the pad was regulated by a control valve

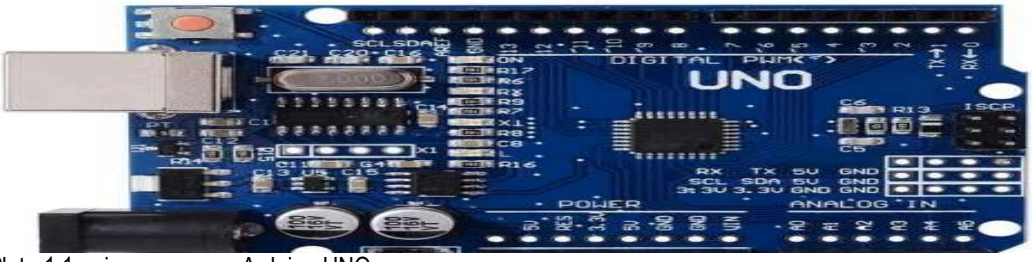

Plate 1.1: microprocessor Arduino UNO

Body Frame

An angle iron was measure and cut to form a rectangular shape that was set in position to give firm support. The part of the frame was welded together by an electric arc welding machine and with a 12-gauge type electrode.

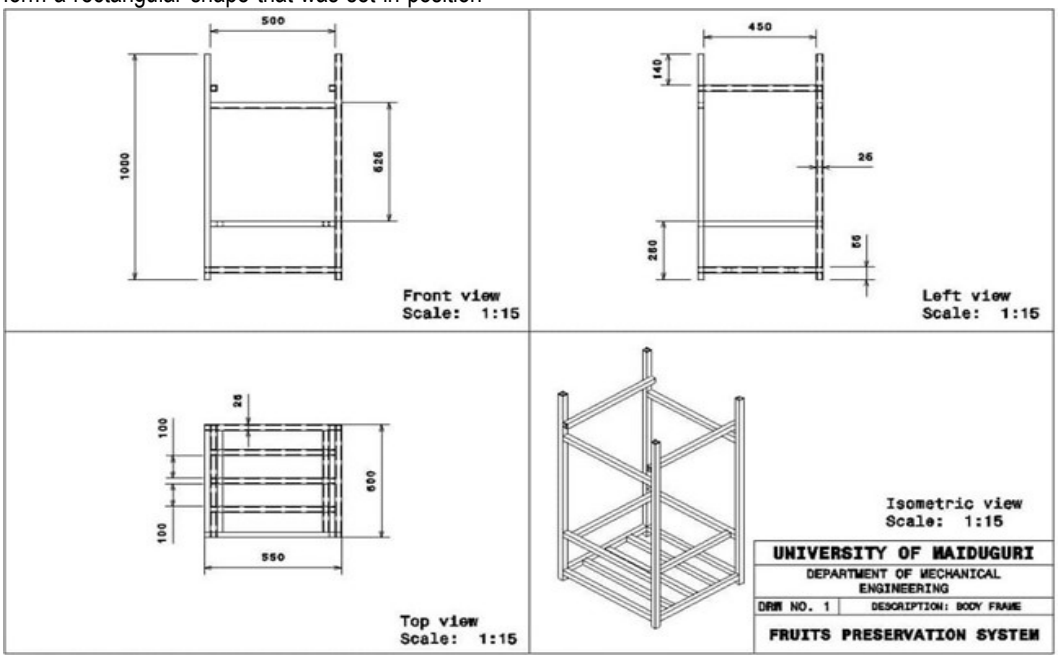

Corresponding author: Maina, M. B
m.muhammad@unimaid.edu.ng
Department of Mechanical Engineering University of Maiduguri Borno State Nigeria.
© 2025. Faculty of Technology Education. ATBU Bauchi. All rights reserved

JOURNAL OF SCIENCE TECHNOLOGY AND EDUCATION 13(1), MARCH, 2025
ISSN: 2277-0011; Journal homepage: www.atbuftejoste.com.ng

Fig. 6. Details of the body frame

The Exploded View

The exploded view in fig. 7 shows all the component parts that formed the Smart solar powered evaporative desert cooler.

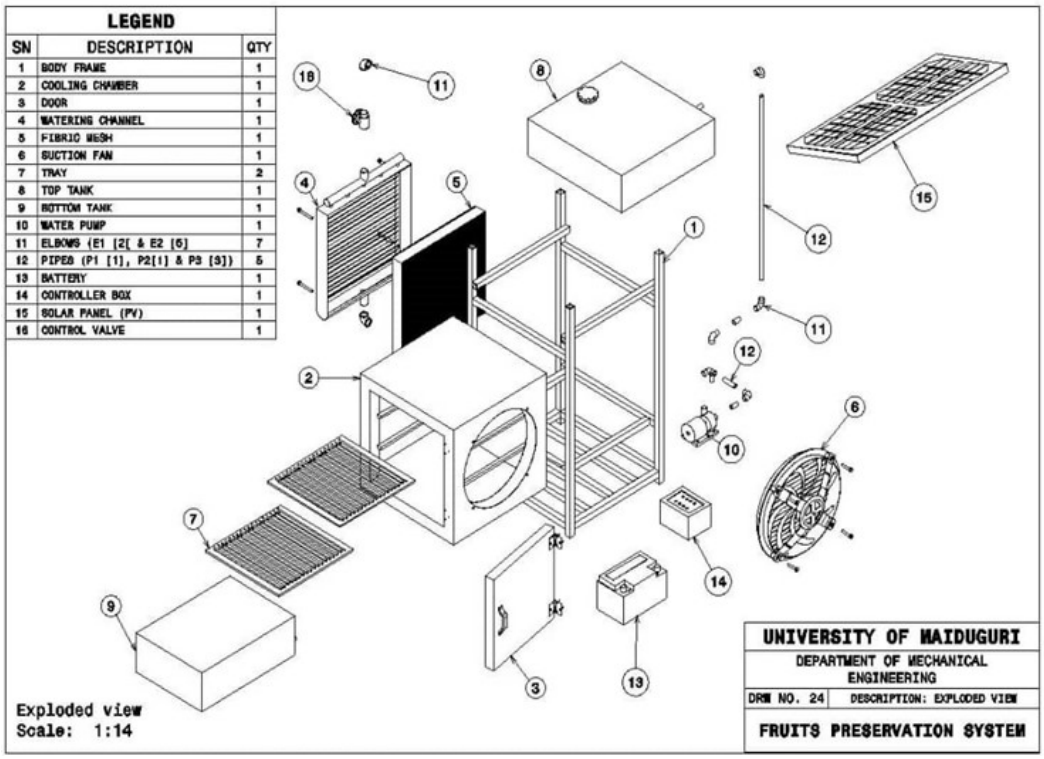

Fig. 7 Component parts of the Smart Solar Evaporative Cooler

No Load Test

A no-load test was conducted to evaluate the Smart Cooler's performance without the Fruits/Vegetables. This test aimed to determine the system's ability to reduce temperature and increase relative humidity compared to ambient conditions with the results presented in Table.1

Table 1. No load Test Results of the Fabricated Smart Solar Powered Evaporative Desert Cooler

Time	Ambient condition			Cooler condition	
	DB (^{0}C)	WB(^{0}C)	RH%	DB(^{0}C)	RH%
10:00am	28.1	23.5	90	25.9	95
10:30am	29.3	22.3	87	22.8	90
11:00am	23.2	23.0	80	22.9	85
11:30am	21.9	19.9	75	20.5	80

Corresponding author: Maina, M. B
m.muhammad@unimaid.edu.ng
Department of Mechanical Engineering University of Maiduguri Borno State Nigeria.
© 2025. Faculty of Technology Education. ATBU Bauchi. All rights reserved

12:00pm	20.9	20.2	73	19.7	88
12:30pm	28.9	27.9	80	29.1	90
1:00pm	29.5	28.9	85	27.9	89
1:30pm	27.9	27.1	79	28.4	81
Average	26.2	24.0	81.1	24.6	87.2

A sample of the test run for the system depicted in table 1 shows how encouraging the result was where the average dry bulb temperature of the system was decreased while the humidity was increased establishing a condition perfect for fruits and vegetables storage for a period enough to prolong the shelf life of the stored materials by maximally dropping the temperature and extending postharvest life for certain fruits and vegetables.

View of the Fabricated Smart Solar Powered Evaporative Cooler under no Load test

The assembled view in fig.8 shows the complete Smart solar powered evaporative desert cooler coupled together.

Fig. 8 views of the fabricated Smart solar powered evaporative desert cooler.

CONCLUSIONS

The design of an Evaporative cooling system was successfully modified and fabricated for smart operation to attain a substantial improvement on the existing evaporative cooling system around the study area. The structure was modified by addition of a micro-processor that smartly operates the system, water pump, a higher capacity deep cycle battery (200mA), a solar panel, and a floater control switch which was the recommendation of previous researchers as improvements on the operational effectiveness of evaporative coolers. i.e. Arduino switch control for continuous energy supply and automated water distribution system for the cooler. This work has successfully leveraged on that challenge and had done justice to it by making the energy supply and distribution of water fully automated showing how the evaporative cooling can maximally drop the temperature and extend postharvest life for certain fruits and vegetables. reducing the need for human support for its full operation.

REFERENCES

Adeniran, M.O.A., Ale, S.O. and Egbe, E. (2011). Mathematics for senior secondary schools' book three 3rd edition ISBN 978 030 753 2, pp. 147-152.

ASHRAE (2013). Handbook of Standards. *American Society of Heating and Refrigeration and Air Conditioning*, vol. 119, pp. 181-193

Dvizama, A.U. (2000). Performance Evaluation of an Active Cooling System for the

Corresponding author: Maina, M. B
m.muhammad@unimaid.edu.ng
Department of Mechanical Engineering University of Maiduguri Borno State Nigeria.
© 2025. Faculty of Technology Education. ATBU Bauchi. All rights reserved

Storage of Fruits and Vegetables. *University of Ibadan, Ibadan. (Unpublished PhD Thesis)*, pp. 49-55.

Feng, S., Fang, T., Lei, C. and Guiying, F. (2014). Dynamic characteristics modeling of a hybrid photovoltaic-thermal solar collector with active cooling buildings. *Energy and Buildings*, vol. 78, pp. 215-221.

Food and Agricultural Organization (1989). Prevention of Post-Harvest Losses Fruits, Vegetables and Root Crops: A Training Manual (Smith, K. ed.). Series: no 17/2. *Food and Agricultural Organization of the United Nations, Rome*, pp. 10-14

Kraemer, K., Cordaro, J.B., Fanzo, J., Gibney, M., Kennedy, E., Labrique, A., Steffen, J. and Eggersdorfer. M. (2016). 4 Food Loss and Waste: The Potential Impact of Engineering Less Waste. In *Good Nutrition: Perspectives for the 21st Century*. *Basel, Switzerland: Karger Publishers*, pp. 173-186.

Olosunde, W.A. (2006). Performance Evaluation of Absorbent Materials in the Evaporative Cooling System for the Storage of Fruits and Vegetable. *Unpublished M.Sc. Thesis, Department of Agricultural Engineering, University of Ibadan, Ibadan*, pp. 47-52.

Rakesh, K. and Marc, A.R. (2011). A Critical review or photovoltaic-thermal solar collectors for air heating. *Applied Energy*, vol. 88, no. 11, pp. 3603-3614.

Corresponding author: Maina, M. B
m.muhammad@unimaid.edu.ng
Department of Mechanical Engineering University of Maiduguri Borno State Nigeria.
© 2025. Faculty of Technology Education. ATBU Bauchi. All rights reserved